NANNI MARINE ENGINE

OPERATOR MANUAL

DGBXXT09002A

ENGINE

N3.21

N3.30

nanni

ENERGY IN BLUE

TRACKED CHANGES

CODE	INDEX	DATE	INITIALS	NATURE OF ALTERATIONS	PAGES
DGBXXT09002	-	11/2018	MC	Create	-
DGBXXT09002	-	10/2019	MC	Oil sump capacity N3.21	Specifications
DGBXXT09002A	-	06/2020	MC	EPA Certificate	End of Manual

Please note all changes and pages associated.
For further clarity, please add a line in front of each change.

S00 SUMMARY

Q00 TRACKED CHANGES 3
TRACKED CHANGES 3
S00 SUMMARY 5
S01 INTRODUCTION 8
INTRODUCTION 8
ABOUT THIS MANUAL 9
CONTENT & UPDATES 9
S02 SAFETY 9
SUMMARY 9
SAFETY SIGNALS 10
SAFETY INFORMATION 10
REPLACEMENT OF MISSING OR DAMAGED SAFETY SIGNS 10
READ SAFETY INSTRUCTIONS 10
ENGINE-GENSET SAFETY ICONS 11
SAFETY PRECAUTIONS 12
HOT EXHAUST PRECAUTIONS 12
WORK IN VENTILATED AREA 12
WASTE DISPOSAL 12
UNWANTED ENGINE START 12
SAFE MAINTENANCE PRACTICE 12
WORK IN CLEAN AREA 12
PROTECTIVE CLOTHING 12
SERVICE ENGINES SAFELY 13
PROPER USE OF TOOLS 13
SUPPORT ENGINES PROPERLY 13
SAFE ILLUMINATED WORK AREA 13
PROPER LIFTING EQUIPMENT 13
NOISE PROTECTION 13
GENSET OUTPUT GENERATED POWER 13
GUARDS REQUIREMENTS 13
STAYING CLEAR OF ROTATING DRIVE LINES 14
PAINT REMOVAL BEFORE HEATING 14
HIGH PRESSURE FUEL SYSTEM OPENING RISK 14
AVOID HIGH PRESSURE FLUIDS 14
SAFE COOLING SYSTEM SERVICE 14
AVOID HEAT NEAR PRESSURIZED FLUID LINES 14
WELDING NEAR ELECTRONIC CONTROL UNIT (ECU) 15
STATIC ELECTRICITY RISK 15
HANDLE FUEL SAFELY - AVOID FIRE 15
BE PREPARED FOR EMERGENCY 15
HANDLE STARTING FLUID SAFELY (ETHER) 15
HANDLING BATTERIES SAFELY 15
PREVENT BATTERY EXPLOSIONS 16
FROST PROTECTION - WINTERIZATION 16
LIVE WITH SAFETY 16
PREVENT ACCIDENTS 16
S03 FLUIDS 17
SUMMARY 17
FUELS 18
DIESEL FUEL 18
SULPHUR CONTENT 18
WINTER DIESEL 18
WATER IN FUEL 18
MICRO-ORGANISMS IN FUEL 18
INERT IMPURITIES IN FUEL 19
DIESEL LUBRICANTS 19
PRECAUTIONS TO UNDERTAKE 19
OILS RECOMMENDED OR AUTHORIZED 19
GENERALITIES 19
OILS VISCOSITY 20
CORRESPONDENCE BETWEEN API AND ACEA OILS 20
DIESEL SULPHUR CONTENT 20
COOLANTS 21
COOLANT DRAIN INTERVALS 21
WATER PROPERTIES 21
WATER PROPERTIES TO MIX WITH COOLANT CONCENTRATE 21
OTHER COOLANTS 22
FREEZE PROTECTION 22
REQUIRED QUANTITY OF COOLANT VS COOLING SYSTEM CAPACITY 22
OPERATING ENGINE IN WARM TEMPERATURE CLIMATES 22
DISPOSING OF WASTE FLUIDS 23
ANNEX 24
ANNEX 1. VOLUME OF GLYCOL 24
S04 ENGINE WARRANTY 25
ENGINE IDENTIFICATION 25
ENGINE HOMOLOGATION 25
ENGINE RESPONSABILITY 26
WARRANTY 26
PROPOSITION 65 STATE OF CALIFORNIA 26
S05 INSTRUMENTS 28
SUMMARY 28
GENERALITIES 29
PANELS WITH KEY 29
PANELS WITHOUT KEY 29
C4 PANEL 30
C4 REAR PANEL CONNECTIONS 30
C4 LOOSE INSTRUMENTS 30
STARTER SWITCH 30
COOLANT TEMPERATURE 30
BATTERY CHARGE 30
PREHEATING 31
ENGINE OIL PRESSURE 31
WATER IN THE FUEL FILTER 31
C4 PRO PANEL 31
C5 PANEL 32
C5 STANDARD LOOSE INSTRUMENTS 32
C5 OPTIONAL LOOSE INSTRUMENTS 32
C5 TACHOMETER & LCD DISPLAY 32
ALTERNATOR CHARGE INDICATOR 32
STARTER SWITCH 32
OIL PRESSURE INDICATOR 33
COOLANT TEMPERATURE INDICATOR 33

S00 SUMMARY

FUEL LEVEL INDICATOR 33
WATER LEVEL INDICATOR 33
TRIM INDICATOR 33
RUDDER INDICATOR 34
ELECTRONIC INSTRUMENTS 34
NANNI CONTROL PANELS 35
S06 COMPONENTS 37
SUMMARY 37
ENGINE MAIN COMPONENTS 38
S07 STARTING & RUNNING 41
SUMMARY 41
BEFORE STARTING 42
ENGINE INSTALLATION 42
FUEL SYSTEM 42
RAW WATER SYSTEM 42
ELECTRICAL SYSTEM 42
CHECK BEFORE STARTING 43
STARTING THE ENGINE 43
COLD WEATHER OPERATION 43
ENGINE START 44
ENGINE STARTED 46
STARTING WITH BOOSTER BATTERIES 46
ENGINE RELUCTANT TO START 46
IDLING ENGINE 46
NORMAL ENGINE OPERATION 47
BREAK IN 47
POWER TAKE OFF 47
REMOTE CONTROL 48
RUNNING 48
BEHAVIOUR OF THE BOAT 48
DURING OPERATION 48
CRUISING SPEED 49
MANOEUVRING 49
ENGINE AND SAILING 50
TROLLING VALVE 50
AFTER RUNNING 51
STOPPING THE ENGINE 51
AFTER STOPPING THE ENGINE 51
ANCHORING 52
COLD WEATHER PRECAUTIONS 52
S08 MAINTENANCE 53
SUMMARY 53
ABOUT 54
GENERALITIES 56
CONTROL CABLES 56
EXHAUST SYSTEM 57
AIR INTAKE 57
CHECK THE AIR FILTER BOX 57
FUEL SYSTEM 58
DRAIN WATER IN FUEL PREFILTER 58
REPLACING THE FUEL FILTER 59
AIR BLEEDING 60
LUBRICATION SYSTEM 61
OIL LEVEL - ADDING ENGINE OIL 61
DRAINING THE ENGINE OIL 62
CHANGING THE OIL FILTER 62
COOLING SYSTEM 63
OVERVIEW 63
COOLANT 64
COOLANT LEVEL 64
DRAINING THE COOLANT CIRCUIT 65
COOLANT - FILLING 65
RAW WATER SYSTEM 66
SIPHON BREAKER 66
EXTRACT THE RAW WATER PUMP IMPELLER 67
CLEANING THE RAW WATER FILTER 68
RAW WATER SYSTEM - DRAINING 68
RAW WATER SYSTEM 69
ELECTRICAL SYSTEM 70
WIRES AND CONNECTORS 70
BATTERY 70
KEEP CLEAN THE BATTERY 70
DISCONNECT THE STARTER CABLES 70
CONNECT THE CABLES 71
BATTERY ELECTROLYTE LEVEL 71
CAMSHAFT TIMING 74
S09 STORAGE 75
LONG TERM STORAGE 76
LONG TERM STORAGE PROCEDURE 76
RESTARTING THE ENGINE 77
BATTERY 77
S10 TROUBLESHOOTING 78

S11 SPECIFICATIONS 80

EPA STATEMENT 88

INTRODUCTION

Before operating the engine, make sure that this Manual is applicable to the engine type. Refer to the identification plate if you are not sure about the engine model designation. If you don't have the correct manual, please contact your Nanni authorized dealer.

All the information and specifications in this manual are based on the technical data available at time of publication. Changes and updates may be made by Nanni without notice.

Illustrations are intended as a general guide and may vary from the equipment fitted in the engine in some details.

If there are any equipment details that are not shown or described in this Manual, or if you have any question regarding the operation of any equipment, your authorized Nanni dealer will be glad to inform you of correct care and operating procedures. Contact a NANNI INDUSTRIES S.A.S. authorized dealer for the servicing of your engine. A list of dealers is available on our website :

www.nannienergy.com

Read this Manual carefully to learn how to operate and service your engine correctly. Failure to do so could result in personal injury or equipment damage. This Manual should be considered as a permanent part of the engine and should remain with it, even when sold.

Right-hand and left-hand sides are determined by standing at the drive or flywheel end (rear) of the engine and facing toward the front of the engine.

Write engine serial numbers and option codes (if any). Your Nanni Agent will need these numbers when you order parts. File the identification numbers in a secure place. Some engine accessories such as air cleaner, and instruments are optional. These accessories may be provided by a third party. This Manual applies only to the engine and those options available through the Nanni distribution network.

ABOUT THIS MANUAL

This Manual contains important information, tips, suggestions and warnings. We urge you to read it carefully and familiarize yourself with the engine before starting.

For your own safety and longer service life of the engine, follow the instructions and warnings contained in this manual and in all documentation provided with the boat. Ignoring them could result in damage to the engine or personal injury to you or others.

Please ensure that this Manual is always kept in the boat. It should always be available to anyone else using the engine, i.e. anyone renting, borrowing or buying the engine from you.

CONTENT & UPDATES

All the informations and specifications in this Manual are based on the technical data applicable at the time of its publication. Changes and updates may be made by Nanni without notice.

Illustrations are intended as a general guide, and may vary from the equipment fitted in the engine in some details. Some sections of the Manual do not apply to all engines. If this is the case, a text indicates which engines it applies to.
If there are any equipment details that are not shown or described in this Operator's Manual, or if you have any questions about the operation of any equipment, your authorized Nanni Dealer will be glad to inform you of correct care and operating procedures.

SUMMARY

S02 SAFETY 9
SUMMARY 9
SAFETY SIGNALS 10
SAFETY INFORMATION 10
REPLACEMENT OF MISSING OR DAMAGED SAFETY SIGNS 10
READ SAFETY INSTRUCTIONS 10
ENGINE-GENSET SAFETY ICONS 11
SAFETY PRECAUTIONS 12
HOT EXHAUST PRECAUTIONS 12
WORK IN VENTILATED AREA 12
WASTE DISPOSAL 12
UNWANTED ENGINE START 12
SAFE MAINTENANCE PRACTICE 12
WORK IN CLEAN AREA 12
PROTECTIVE CLOTHING 12
SERVICE ENGINES SAFELY 13
PROPER USE OF TOOLS 13
SUPPORT ENGINES PROPERLY 13
SAFE ILLUMINATED WORK AREA 13
PROPER LIFTING EQUIPMENT 13
NOISE PROTECTION 13
GENSET OUTPUT GENERATED POWER 13
GUARDS REQUIREMENTS 13
STAYING CLEAR OF ROTATING DRIVE LINES 14
PAINT REMOVAL BEFORE HEATING 14
HIGH PRESSURE FUEL SYSTEM OPENING RISK 14
AVOID HIGH PRESSURE FLUIDS 14
SAFE COOLING SYSTEM SERVICE 14
Avoid heat near pressurized fluid lines 14
WELDING NEAR ELECTRONIC CONTROL UNIT (ECU) 15
STATIC ELECTRICITY RISK 15
HANDLE FUEL SAFELY - AVOID FIRE 15
BE PREPARED FOR EMERGENCY 15
HANDLE STARTING FLUID SAFELY (ETHER) 15
HANDLING BATTERIES SAFELY 15
Prevent battery explosions 16
FROST PROTECTION - WINTERIZATION 16
LIVE WITH SAFETY 16
PREVENT ACCIDENTS 16

SAFETY SIGNALS

A signal word—**DANGER**, **WARNING**, or **CAUTION**—is used in conjunction with the safety-alert symbol.

DANGER identifies the most serious hazard with lethal possible consequences.

WARNING identifies serious hazard with possible large injury consequences.

CAUTION identifies precautions to undertake which if not followed could lead to the above mentioned safety warnings. Damage to equipement could happen.

NOTICE is used for specific attention to sensitive actions on equipment. Other signals still applying.

IMPORTANT is a signal with a meaning of care to apply to equipment.

SAFETY INFORMATION

This symbol on the engine or in this manual is an alert to the potential for personal injury. Follow recommended precautions and safe operating practices.

REPLACEMENT OF MISSING OR DAMAGED SAFETY SIGNS

Replace missing or damaged safety signs. There can be additional safety information contained on parts and components sourced from suppliers that is not reproduced in this Operator Manual.

READ SAFETY INSTRUCTIONS

Carefully read all safety messages in this manual and on your genset safety signs.

Keep safety signs in good condition. Be sure new equipment components and repair parts include the current safety signs.

Replacement safety signs are available from your dealer. There can be additional safety information contained on parts and components sourced from suppliers that is not reproduced in this Operator Manual.

Keep your equipment in proper working condition.

DANGER !

WARNING !

CAUTION !

NOTE !

IMPORTANT !

Please keep in mind that above safety labels have no degree of danger. Any irresponsible action could lead to a real danger situation.

Learn how to operate the equipment and how to use controls properly. Do not let anyone operate it without instruction.

Unauthorized modifications to the equipment may impair the function and/or safety and affect its life span.

If you do not understand any part of this document and need assistance, contact your Nanni representative.

ENGINE-GENSET SAFETY ICONS

Some stickers are fixed directly on the engine. They are intended to help you to quickly identify the location of certain components and avoid possible hazards when working on the engine.

Ensure that these stickers are always visible and replace them if torn or washed up.

Refers to important informations and instructions to follow before handling the engine.

Indicates possible electrical hazards.

Indicates hot parts entailing substantial risks of burns.

Indicates an area containing pressurised fluids.

Indicates hazardous rotating parts.

Stipulates that no flames or sparks should be created in the vicinity.

Indicates where to check the coolant level.

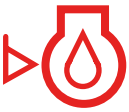

Indicates where to check the engine oil level.

Indicates the coolant drain orifice.

Indicates the oil drain orifice.

SAFETY PRECAUTIONS

HOT EXHAUST PRECAUTIONS

Servicing machine or attachments with engine running can result in serious personal injury. Avoid exposure and skin contact with hot exhaust gases and components.

Exhaust parts and streams become very hot during operation. Exhaust gases and components reach temperatures hot enough to burn people, ignite, or melt common materials.

WORK IN VENTILATED AREA

Engine exhaust fumes can cause sickness or death. If it is necessary to run an engine in an enclosed area, remove the exhaust fumes from the area with an exhaust pipe extension.

If you do not have an exhaust pipe extension, open the doors and get outside air into the area.

WASTE DISPOSAL

Improperly disposing of waste can threaten the environment and ecology. Potentially harmful waste used in engines include such items as oil, fuel, coolant, fluids filters and batteries.

Use leakproof containers when draining fluids ; Do not pour waste into the sea, ground, down a drain, or into any other water source.

Contact your local environmental or recycling center, or your dealer for information on the proper way to recycle or dispose of waste.

UNWANTED ENGINE START

Avoid possible injury or death from engine runaway. Do not start engine by shorting across the starter motor solenoid terminals posts. Engine will start if normal circuitry is bypassed. Start engine from operator's seat.

SAFE MAINTENANCE PRACTICE

Understand service procedures before doing work. Keep work area clean and dry. Never lubricate, service, or adjust engine while it is running. Keep hands, feet, hair and clothing away from moving parts.

Fix damage immediately. Replace worn or broken parts. Remove any build up of grease, oil, or debris. On self-propelled equipment, disconnect battery ground (-) before making adjustments on electrical systems or welding.

WORK IN CLEAN AREA

Clean work area and machine before starting a job. Make sure you have all necessary tools to do your job. Have the right parts on hand. Read all instructions thoroughly ; do not attempt shortcuts.

PROTECTIVE CLOTHING

Wear close fitting clothing and safety equipment appropriate to the job. Operating equipment safely requires the full attention of the operator. Do not wear radio or music headphones while operating the engine.

SERVICE ENGINES SAFELY

Tie long hair behind your head. Do not wear a necktie, scarf, loose clothing, or necklace when you work near moving parts. If these items were to get caught, severe injury could result. Remove rings and other jewelry to prevent electrical shorts and entanglement in moving parts.

PROPER USE OF TOOLS

Use tools appropriate to the work. Makeshift tools and unfollowed procedures can create safety hazards. Do not use U.S mechanical tools on metric fasteners (i.e. a 1/2 inch wrench on a 13 mm nut).

Use power tools only to loosen threaded parts and fasteners. For loosening and tightening hardware, use the correct size tools. Avoid bodily injury caused by slipping wrenches. Use only service parts meeting manufacturer specifications.

SUPPORT ENGINES PROPERLY

Always lower the attachment or implement to the base before you work on an engine. If the work requires that the engine be lifted, provide secure system. If left in a raised position, hydraulically supported device can settle or leak down. Do not support engines on any kind of props that may crumble. Do not work under an engine that is solely supported by a jack. Follow recommended procedures in this manual.

SAFE ILLUMINATED WORK AREA

Illuminate your work area adequately and safely. Use a portable safety light for working inside the engine room. Make sure the bulb is enclosed by a wire cage. The hot filament of an accidentally broken bulb can ignite spilled fuel or oil.

PROPER LIFTING EQUIPMENT

Lifting heavy components incorrectly can cause severe injury or equipment damage. Use expertise of staff holding relevant(s) legal capacity to operate heavy lifting equipment, with the know-how of using slings and chains.

NOISE PROTECTION

Prolonged exposure to loud noise can cause impairment or loss of hearing. Wear a suitable hearing protective device such as earmuffs or earplugs to protect against objectionnable or uncomfortable loud noises.

GENSET OUTPUT GENERATED POWER

Genset will deliver a sizeable amount of electrical power which can be lethal if not handled properly. Thus, any service, connection or repair on the alternator can only done by a certified marine electrician.

GUARDS REQUIREMENTS

Rotating cooling system fans, belts, pulleys, and drives can cause serious injury. Keep all guards in place at all times during the engine operation. Wear close-fitting clothes. Stop the engine and be sure that fans, belts, pulleys, and drives are stopped before making adjustments, connections, or cleaning near fans and their drive components.

STAYING CLEAR OF ROTATING DRIVE LINES

Entanglement in rotating driveline can cause serious injury or death. Keep all shields in place at all times. Make sure rotating shields turn freely.

Wear close-fitting clothing. Stop the engine and be sure that all rotating parts and drivelines are stopped before making adjustments, connections, or performing any type of service on engine or driven equipment.

PAINT REMOVAL BEFORE HEATING

Avoid potentially toxic fumes and dust. Hazardous fumes can be generated when paint is heated by welding, soldering, or in using a torch.

Paint removal :

- Remove paint a minimum of 100 mm (4 in.) from area to be affected by heating. If paint cannot be removed, wear an approved respirator mask before heating or welding.
- If you sand or grind paint, avoid breathing the dust. Wear an approved respirator.
- If you use solvent or paint stripper, remove stripper with soap and water before welding. Remove solvent or paint stripper containers and other flammable material from area.
- Allow fumes to disperse at least 15 minutes before welding or heating.
- Do not use a chlorinated solvent in areas where welding will take place.
- Do all work in an area that is well ventilated to carry toxic fumes and dust away.
- Dispose of paint and solvents properly.

HIGH PRESSURE FUEL SYSTEM OPENING RISK

High-pressure fluid remaining in fuel lines can cause serious injury. Do not disconnect or attempt repair of fuel lines, sensors, or any other components between the high-pressure fuel pump and nozzles on engines with High Pressure Common Rail (HPCR) fuel system. Only technicians familiar with this type of system can perform repairs. Consult your engine representative.

AVOID HIGH PRESSURE FLUIDS

Inspect hydraulic hoses periodically – at least once per year – for leakage, kinking, cuts, cracks, abrasion, blisters, corrosion, exposed wire braid or any other signs of wear or damage. Replace worn or damaged hose assemblies immediately with approved replacement parts. Escaping fluid under pressure can penetrate the skin causing serious injury.

Avoid the hazard by relieving pressure before disconnecting hydraulic or other lines. Tighten all connections before applying pressure. Search for leaks with a piece of cardboard.

SAFE COOLING SYSTEM SERVICE

Explosive release of fluids from pressurized cooling system can cause serious burns. Shut off engine. Only remove filler cap when cool enough to touch with bare hands. Slowly loosen cap to first stop to relieve pressure before removing completely.

AVOID HEAT NEAR PRESSURIZED FLUID LINES

Flammable spray can be generated by heating near pressurized fluid lines, resulting in severeburns to yourself and bystanders. Do not heat by welding, soldering, or using a torch near pressurized fluid lines or other flammable materials.

Pressurized lines can accidentally burst when heat goes beyond the immediate flame area.

Any fluid injected into the skin must be surgically removed within a few hours or gangrene may result. Doctors unfamiliar with this type of injury should reference a knowledgeable medical source.

WELDING NEAR ELECTRONIC CONTROL UNIT (ECU)

If welding is required around the engine, or in the engine room, ask first for a permission from the person in charge. Do not jump-start engine with arc welding equipment. Currents and voltages delivered are too high and may cause permanent damage. Direct welding onto the engine is forbidden.

1. Disconnect the negative (-) battery cable(s).
2. Disconnect the positive (+) battery cable(s).
3. Connect the positive and negative cables together. Do not attach to engine support frame.
4. Clear or move any wiring harness sections away from welding area.
5. Connect welder ground close to welding point and away from control units.
6. After welding, reverse Steps 1-5.

STATIC ELECTRICITY RISK

The removal of sulfur and other compounds in Ultra-Low Sulfur Diesel (ULSD) fuel decreases its conductivity and increases its ability to store a static charge. Refineries may have treated the fuel with a static dissipating additive.

However, there are many factors reducing the effectiveness of the additive over time. Static charges can build up in ULSD fuel while it is flowing through fuel delivery systems. Static electricity discharge in presence combustible vapors could result in a fire or explosion.

Therefore, it is important to ensure that the entire system used to refuel your engine (fuel supply tank, transfer pump, transfer hose, nozzle, and others) is properly grounded and bonded.

Consult your fuel or fuel system supplier to ensure that the delivery system is in compliance with fueling standards for proper grounding and bonding practices.

HANDLE FUEL SAFELY - AVOID FIRE

Handle fuel with care: it is highly flammable. Do not refuel the engine while smoking or when near open flame or sparks.Always stop engine before refueling. Prevent fires by keeping engine room clean of accumulated trash, grease, and debris. Always clean up spilled fuel. Use only an approved fuel container for transporting flammable liquids. Do not store fuel container where there is an open flame, spark, or pilot light such as within a water heater or other appliance.

BE PREPARED FOR EMERGENCY

Be prepared if a fire starts. Keep a first aid kit and fire extinguisher handy. Keep emergency numbers for doctors, ambulance service, hospital, and fire department near your telephone.

HANDLE STARTING FLUID SAFELY (ETHER)

Starting fluid is highly flammable. Keep all sparks and flame away if using it. Keep starting fluid away from batteries and cables.

To prevent accidental discharge when storing the pressurized can, keep the cap on the container, and store in a cool, protected location. Do not incinerate or puncture a starting fluid container. Do not use starting fluid on an engine equipped with glow plugs or an air intake heater.

HANDLING BATTERIES SAFELY

If not handled properly, batteries are a potential source of hazards. Excess of gases in batteries may explode. Keep sparks and flames away from batteries. **Never use a cigarette lighter to observe electrolyte level**. Use a flashlight to do it. Never check battery charge in shorting posts with a metal part. Use a voltmeter or hydrometer.

Always remove grounded (-) battery clamp first and replace grounded clamp last. Sulfuric acid in battery electrolyte is poisonous and strong enough to burn skin, eat holes in clothing, and cause blindness if splashed into eyes.

Avoid hazards and acid burns in :

- Filling batteries in a well-ventilated area
- Wearing eye protection and rubber gloves
- Avoiding use of air pressure to clean batteries
- Avoiding breathing fumes when electrolyte is
- Avoiding spilling or dripping electrolyte
- Using correct battery booster or charger procedure.

If acid is spilled on skin or in eyes:

- Flush skin with water
- Apply baking soda or lime to help neutralize the acid
- Flush eyes with water for 15-30 minutes.
- Get medical attention immediately.

If acid is swallowed:

- Do not induce vomiting
- Drink large amounts of water or milk, but do not exceed 2 L (2 qt.)
- Get medical attention immediately.

PREVENT BATTERY EXPLOSIONS

Keep sparks, lighted matches, and open flame away from the top of battery. Battery gas can explode. Never check battery charge by placing a metal object across the posts. Use a volt-meter or hydrometer. Do not charge a frozen battery: it may explode. Warm up battery to 16°C (60°F) before doing it.

WARNING !

Battery posts, terminals, and related accessories contain lead and lead compounds. Rinse hands after handling batteries.

FROST PROTECTION - WINTERIZATION

See Maintenance Section 08 - Raw Water System - Risk of icing conditions / Protection against frost.

WARNING !

When the engine has been set for winterization, place "**DO NOT OPERATE**" labels onto taps, valves, parts of equipment which have been turned off. Place a large and visible reminder on the wheelhouse dashboard.

LIVE WITH SAFETY

Before returning engine to customer, make sure engine is functioning properly, especially the safety systems. Make sure that all guards and shields are in place.

PREVENT ACCIDENTS

IMPORTANT !

When engine is OFF, always set the transmission lever to neutral position.

SUMMARY

S03 FLUIDS 17
SUMMARY 17
FUELS 18
DIESEL FUEL 18
SULPHUR CONTENT 18
WINTER DIESEL 18
WATER IN FUEL 18
MICROORGANISMS IN FUEL 18
INERT IMPURITIES IN FUEL 19
DIESEL LUBRICANTS 19
PRECAUTIONS TO UNDERTAKE 19
OILS RECOMMENDED OR AUTHORIZED 19
GENERALITIES 19
OILS VISCOSITY 20
CORRESPONDENCE BETWEEN API AND ACEA OILS 20
COOLANTS 21
COOLANT DRAIN INTERVALS 21
WATER PROPERTIES 21
WATER PROPERTIES TO MIX WITH COOLANT CONCENTRATE 21
OTHER COOLANTS 22
FREEZE PROTECTION 22
REQUIRED QUANTITY OF COOLANT VS COOLING SYSTEM CAPACITY 22
OPERATING ENGINE IN WARM TEMPERATURE CLIMATES 22
DISPOSING OF WASTE FLUIDS 23
ANNEX 24
ANNEX 1. VOLUME OF GLYCOL 24

FUELS

DANGER !

Fuels and some fluids on board ships are easily flammable. Handle fuels with care and respect all safety rules. Do not refuel the tank while the engine is running. Do not smoke during the filling process or in the engine compartment. Ventilate the engine compartment before starting. Wear protective gloves and eye protective glasses. Avoid synthetic clothing which can melt when ignited. Always keep a fire extinguisher nearby.

DIESEL FUEL

Diesel approved by Nanni Industries on the engines of the firm are as follows :

- EN 590 (Europe),
- ASTM D975 (U.S.A and territorial waters assimilated, particularly in the Caribbean and Pacific areas),
- BS 2869 Part 1 Class A1 (G.B),
- JIS KS2204 Fuel N°02 (Japan).

These regulations are in compliance with ISO 8217 DMX.

SULPHUR CONTENT

European Union :
Low-sulphur diesel (<50 mg/kg sulphur) [EN590], or sulphur-free (<50 mg/kg sulphur [DIN EN590], [ULSD].

Non-European Union :
Sulphur contained in diesel fuel not in accordance with EN 590 regulation significantly reduces the performance of the engine lubricant. More frequent oil changes are mandatory and also induce much shorter fuel filter replacement intervals. Request a certificate of specifications from the fuel distributor and forward it to the nearest Nanni local representative for advice and action.

Fuels not intended for the operation of marine engines or with very high sulphur content can cause irreparable damage to the engine and are not covered by any warranty from Nanni Industries.

WINTER DIESEL

Without specific mention, these distributed fuels satisfy the climates in which they are geographically available. Generally speaking, summer diesel fuel complying with EN 590 is usable down to a temperature of 0°C [32°F], and the winter formulated fuel, down to a temperature of -20 °C [-4°F] (type No. 01-D in U.S.A). In any case, consult your local distributor to ensure compatibility of the fuel.

NOTE !

Additions of petroleum distillates, petrol, solvents, unapproved additives to improve the fluidity of diesel fuel at very low temperatures can cause irreparable engine damage and will void all contractual warranties and responsabilities from Nanni Industries.

WATER IN FUEL

Water is a non-flammable and incompressible liquid. For this reason, its presence is particularly harmful to the operation of the engine and to the entire fuel injection system. Water easily enters the tank by simple condensation and especially when it is left or partially empty. Fill up the fuel tank before storage/winter storage. Check the water-diesel separator regularly and clean it as required. Anticipate the replacement of the fuel filter. If a large quantity of water is present in the tank, drain it and flush the entire fuel and injection system with clean diesel fuel. Water in the diesel fuel can cause irreparable damages to the engine and are not covered by any warranty from Nanni Industries.

MICROORGANISMS IN FUEL

The presence of water in the tank automatically leads microorganisms and bacteria to grow and will mix with the fuel. These microorganisms grow rapidly with a favorable temperature. Depending on their size, they can pass through filters and penetrate in the fuel injection system and cause a total engine failure which is not covered by Nanni Industries warranty. In the event of fuel contamination, contact the nearest Nanni agent who may, if necessary, use an approved disinfectant.

INERT IMPURITIES IN FUEL

Others impurities than microorganisms and bacteria do exist : they are rust debris falling out from the internal walls of the metal tanks. Some types of fiberglass tanks are also subject to osmosis over time and tiny particles may come off internal walls and circulate in the diesel fuel. These impurities can pass through the filters and creep into the injection system and cause a total failure of the engine which is not covered by Nanni Industries warranty.

DIESEL LUBRICANTS

PRECAUTIONS TO UNDERTAKE

Engine oils must be handled with care, both for reasons of safety and the risk of pollution for the environment.

Due to their inertia, hot oils retain a higher temperature than expected. A hot oil can cause severe burns on the skin and leave after effects. This phenomenon is emphasized when draining used oil. Wear protective gloves and eye protective glasses. Avoid synthetic clothing.

To avoid introducion of impurities into the engine during filling or topping up, be sure to thoroughly clean the filler inlet hole first and use a container free of any contamination.

OILS RECOMMENDED OR AUTHORIZED

It is necessary to differentiate the breaking-in oils from the lubricating oils after running-in. All engine manufacturers do not have the same recommendations. User manuals provide information about proper oils to use for running-in (if recommended) and at which running hours and of time lapse of run.

GENERALITIES

The oil used in the engine must have a viscosity in accordance with the ambient temperatures at which the engine is operated, according to API (American Petroleum Institute) and SAE (Society of Automotive Engineers) classifications.

Following the entry into force of strict antipollution regulations, engine oils have been developed for use with low sulphur fuels (LSD or ULSD). The oils classified “CF” being now obsolete, use oils “CJ-4, CI-4, CH-4”.

The oils “CH-4” do come in replacement of the “CD, CJ, CF-4 and CG- 4“. In all cases, the use of high sulphur fuel significantly reduces the span between oil changes whichever oil is used.

OILS VISCOSITY

Viscosity is a characteristic of oil flow or fluidity, defined by two numbers: cold and hot. Example :

15W-40: cold viscosity index followed by the letter W signifying winter. A low value indicates good fluidity at low temperatures.

15W-40: hot viscosity index (100 °C - summer). A high value indicates a better lubrication at hot temperatures.

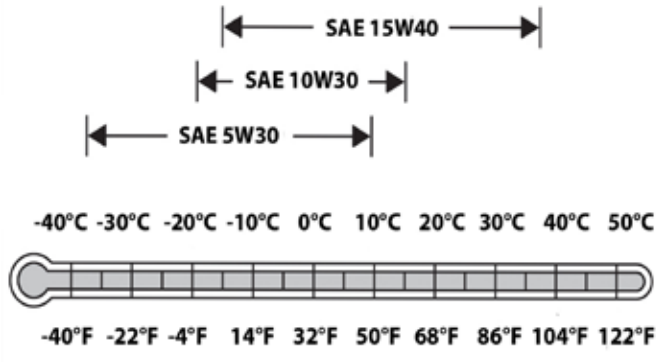

Normative instances :

- Society of Automotive Engineers (SAE),
- American Petroleum Institute (API),
- Association des Constructeurs Européens d'Automobiles (ACEA),
- Japanese Automobile Manufacturer Association (JAMA).

IMPORTANT !

On manufacturers side, oils are subject to constant improvements, particularly concerning the additives allowing a better resistance towards oxydation and fuel economy. Refer to the expertise of the local Nanni Industries representative regarding the oil that best suits your engine.

CORRESPONDENCE BETWEEN API AND ACEA OILS

API	ACEA - JAMA
CG-4	ACEA E1
CF-4	ACEA E2 ; ACEA E3
CH-4	ACEA E5 ; JAMA DH 5
CI-4	ACEA E7
CJ-4	ACEA E9 ; JAMA DH 2

DIESEL SULPHUR CONTENT

NOTE

Diesel sulfur content affects engine oil and filter service intervals.

Use of diesel fuel with sulfur content less than 2000 mg/kg (2000 ppm) is RECOMMENDED.

Use of diesel fuel with sulfur content of 2000-5000 mg/kg (2000-5000 ppm) REDUCES by 50% the oil and filter change interval.

Do not use diesel fuel with sulfur content greater than 5000 mg/kg (5000 ppm).

IMPORTANT !

To avoid engine damage:

- **Reduce oil and filter service intervals by 50% when using BioDiesel blends greater than B20. Oil analysis may allow longer service intervals.**
- **Use only approved oil types.**

COOLANTS

WARNING !

Products not fulfilling the demands in this section may lead to faults and damage occurring in the cooling system. This can lead to the invalidation of Nanni's warranty for faults and damage caused by the use of inappropriate coolant.

COOLANT DRAIN INTERVALS

Drain and flush the cooling system of the engine and refill with fresh coolant at the indicated intervals, which depends of the coolant used and of the maintenance schedule service of the engine.

WATER PROPERTIES

Water properties are important to the efficiency of the cooling system. Distilled, deionized, or demineralized water is recommended for mixing with ethylene glycol or propylene glycol base engine coolant concentrate.

IMPORTANT !

- Do not use cooling system sealing additives, neither antifreeze containing sealing additives.
- Do not mix ethylene glycol and propylene glycol base coolants together.
- Do not mix coolants of various brands and makes together.
- Do not use coolants containing nitrites.

WATER PROPERTIES TO MIX WITH COOLANT CONCENTRATE

Engine coolants are a combination of three chemical components: ethylene glycol (EG) or propylene glycol (PG) antifreeze, inhibiting coolant additives, and adequate “quality” water.

Do not use bottled drinking water as it often contains higher concentrations of dissolved solids.

Water used in the cooling system should meet the following minimum specifications for quality :

Chlorides	< 40 mg / L
Sulfates	< 100 mg / L
Total dissolved solids	< 340 mg / L
Total hardness	< 170 mg / L
pH	5,5-9,0

When mixing coolant concentrate with water, do not use less than 40 % or greater than 60 % concentration of coolant. Less than 40 % is inadequate for corrosion protection. Greater than 60 % can result in coolant gelation (solidification by cooling) and cooling system problems. As a general rule, a mixing of 50/50% is preferred whenever possible.

OTHER COOLANTS

Other ethylene glycol or propylene glycol base coolants may be used if they meet the following specification :

- Pre-mix coolant meeting ASTM D6210 requirements.
- Coolant concentrate meeting ASTM D6210 requirements in a 40-60 % mixture of concentrate with appropriate water.

If coolant meeting one of these specifications is unavailable, use a coolant concentrate or pre-mix coolant that has a minimum of the following chemical and physical properties :

- Provides cylinder liner cavitation protection according to a proven and recorded method or a fleet study run at or above 60 % load capacity.
- Is formulated with a nitrite-free additive package.
- Protects the cooling system metals (cast iron, aluminum alloys, and copper alloys such as brass) from corrosion.

FREEZE PROTECTION

The relative concentrations of glycol and water in the engine coolant determine the freezing protection limit.

IMPORTANT !

DO NOT use a coolant-water mixture greater than 60% ethylene glycol or 60% propylene glycol. Refer to the table below :

Ethylene Glycol	Freeze protection limit
40%	-24°C (-12°F)
50%	-37°C (-34°F)
60%	-52°C (-62°F)
Propylene Glycol	**Freeze protection limit**
40%	-24°C (-12°F)
50%	-37°C (-34°F)
60%	-52°C (-62°F)

REQUIRED QUANTITY OF COOLANT VS COOLING SYSTEM CAPACITY

See ANNEX 1: VOLUME OF GLYCOL

OPERATING ENGINE IN WARM TEMPERATURE CLIMATES

Nanni engines are designed to operate with recommended engine coolants quoted in this chapter.

Always use a recommended engine coolant, even when operating in geographical areas where freeze protection is not required (internal engine corrosion protection).

IMPORTANT !

Tap clean water may be used as coolant substitute in emergency situations only. Contact a Nanni representative as soon as it is possible for assistance. Get this water flushed as soon as possible.

Running the engine with water only will make this substitute coolant to foam, aluminum and iron parts of the engine will be subject to fast internal corrosion, along with scaling, and cavitation occurances, even with coolant conditioners.
When cooling system has been drained from the engine, refill with recommended coolant as soon as possible.

DISPOSING OF WASTE FLUIDS

Prior to contemplate any draining, make sure that all adequate gear such as : funnel(s), hose(s), suitable container(s) and so on, are at hand.

Use leakproof containers when draining fluids. Do not use food or beverage containers that may mislead someone into drinking from them.

Wear gloves and eye protection glasses. Follow all safety rules. Wait for engine to cool down.

Do not let waste to drip on the ground, down a city drain, or into any water source. Improperly disposing of engine coolants, oils, or other chemical fluids is a threat against environment and is an offence in many countries.

Inquire on the proper way to recycle or dispose of waste from your local environmental or recycling center, or from your Nanni engine representative or service dealer.

ANNEX

ANNEX 1. VOLUME OF GLYCOL

% by volume of Glycol	30	35	40	45	50	Cooling system capacity in dm³
Ice slush starts to form at °C	-16	-21	-24	-30	-37	
Ice slush starts to form at °F	3.2	-5.8	-11.2	-22	-34.6	
Ethylene glycol dm³ (litre)	9	11	12	14	15	30
	12	14	16	18	20	40
	15	18	20	23	25	50
	18	21	24	27	30	60
	21	25	28	32	35	70
	24	28	32	36	40	80
	27	32	36	41	45	90
	30	35	40	45	50	100
	33	39	44	50	55	110
	36	42	48	54	60	120
	39	46	52	59	65	130
	42	49	56	63	70	140
	45	53	60	68	75	150
	48	56	64	72	80	160
	51	60	68	77	85	170
	54	63	72	81	90	180
	57	67	76	86	95	190
	60	70	80	90	100	200

Volume of glycol below 30% to be avoided.

ENGINE IDENTIFICATION

NOTE !

Minor engine details may not be exactly as shown. Some components may not be part of the engine ordered. Not binding pictures.

Both the engine and the transmission has an identification plate that contain several informations.

Keep these plates accessible and in good condition. Record and keep the engine and transmission serial number and designation. These numbers should always be quoted when ordering service and replacement parts. The engine identification plate is as follow :

TYP indicates the commercial designation of the engine.
• NR indicates the engine serial number.
• CODE lists various specifications of the engine.

Example :

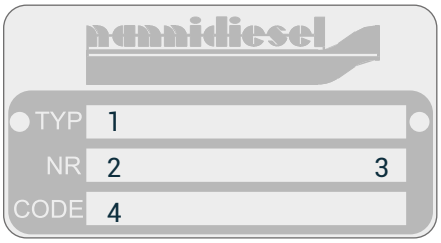

1 : Type of engine
2 : Engine number
3 : Engine code
4 : Nanni number

ENGINE HOMOLOGATION

The engine type can be exhaust emission certified. It means that Nanni guarantees that all engines of the same type that are manufactured are approved and certified by the authorities in accordance with different exhaust emissions standards.

However, for the engine to be in accordance with this standards, special requirements for maintenance and service are to be followed :

- Only Nanni replacement parts must be used.
- Maintenance intervals must be observed.
- The engine must not be modified in any way except with accessories and service kits approved by Nanni Industries S.A.S. France.
- Service of the fuel system must always be carried out by an authorized Nanni workshop.
- No modifications to the air intake and exhaust system may be undertaken.
- Seals may only be broken by authorized personnel.
- The operation instructions stated in the relevant manuals should be follow by the user.

Nanni's responsibility for the engine specification being in accordance with the certification will be invalidate if one or several of this conditions are not followed.

S04 ENGINE WARRANTY

ENGINE RESPONSABILITY

Nanni designs its engines to have minimum environmental impact. This objective, however, can only be achieved with your full cooperation.

Our operating and maintenance instructions are to help you to protect your engine and adopt environmentally responsible behaviour.

Ensure you only use the fuels and oils recommended. Using another type of fuel or oil could cause major malfunctions, an higher fuel consumption, a reduced engine service life, and a greater discharge of exhaust gases.

When draining the oil and changing the oil or fuel filter, dispose of the waste in an appropriate container. These fluids cause major damage to flora and fauna if discharged into nature. Use an absorption kit in the event of accidental discharge of oil or fuel into the water.

WARRANTY

This manual is supplemented by a Warranty Information Booklet. We recommend that you read this publication thoroughly.

Pay special attention to the applicable duty cycle and to the resulting limitations. Failure to comply with the warranty conditions will void the Warranty.

The validity of the Warranty is also dependent on proper installation and maintenance operation being carried out by an authorized Nanni representative.

NOTE !

Late or improper maintenance or use of spare parts other than Nanni original spare parts will invalidate Nanni's responsibility for the engine accordance with homologation and will void the Warranty.

Modifications to the engine's settings, as well as any other technical modification (accessories, spare parts, additional equipment, etc) ***ARE FORBIDDEN WITHOUT WRITTEN AUTHORIZATION FROM NANNI INDUSTRIES S.A.S.***

Any modification will void the Warranty. Damage caused by failure to follow operation instructions or incorrect operation is also not covered by the warranty.

PROPOSITION 65 STATE OF CALIFORNIA

WARNING !

Diesel engine exhaust and some of its constituants are known to the state of California to cause cancer, birth defects, and other reproductive harm.

Battery posts and terminals, related devices do contain lead or lead compounds, chemicals known to the State of California to cause cancer, birth defects or other reproductive harm. Thoroughly wash your hands after handling any of the above components.

NOTES

SUMMARY

S05 INSTRUMENTS 28
SUMMARY 28
GENERALITIES 29
PANELS WITH KEY 29
PANELS WITHOUT KEY 29
C4 PANEL 30
C4 REAR PANEL CONNECTIONS 30
C4 LOOSE INSTRUMENTS 30
STARTER SWITCH 30
COOLANT TEMPERATURE 30
BATTERY CHARGE 30
PREHEATING 31
ENGINE OIL PRESSURE 31
WATER IN THE FUEL FILTER 31
C5 PANEL 32
C5 STANDARD LOOSE INSTRUMENTS 32
C5 OPTIONAL LOOSE INSTRUMENTS 32
C5 TACHOMETER & LCD DISPLAY 32
ALTERNATOR CHARGE INDICATOR 32
STARTER SWITCH 32
OIL PRESSURE INDICATOR 33
COOLANT TEMPERATURE INDICATOR 33
FUEL LEVEL INDICATOR 33
WATER LEVEL INDICATOR 33
TRIM INDICATOR 33
RUDDER INDICATOR 34
ELECTRONIC INSTRUMENTS 34
NANNI CONTROL PANELS 35

GENERALITIES

The instrument panel (or set of separate gauges) provides important informations about the engine. This chapter only describes instruments and panels fitted on Nanni engines. Contact your dealer if the boat is fitted with instruments not described herewith or if you are not sure about their function. Depending of the type of boat, the instruments can be installed directly on a dashboard without the panel as shown.
On some boats, a system without key is used as an additional instrument panel on the Flying Bridge deck. As a proper practice code, the main panel is fitted with a key switch located in the wheelhouse and used to prevent unauthorized starting from the secondary panel. To start the engine from this panel, the key of the main panel must be turned to the IGNITION position (ON).
Instruments panels offer from Nanni Industries is very wide and depends also from the type of engine and the technology involved in it. That is, some panels are solely dedicated to one engine only. Here below, the reader will find a view of the current Nanni instruments panels range, followed by a table showing engines and relevant(s) instruments panel.

PANELS WITH KEY		PANELS WITHOUT KEY
	ECO	
	A4	
	B4	
	C4	

C4 PANEL

C4 REAR PANEL CONNECTIONS

Nanni assembled panels are plug and play directly to the engine via an extension cable.

C4 LOOSE INSTRUMENTS

STARTER SWITCH

This device allows to start and to stop the engine.

On/Stop : This button allows to connect the system voltage and to stop the engine
Start : To preheat the engine, push the button halfway for 10 to 20 seconds depending on the outside temperature. To start the engine, push the button fully.

COOLANT TEMPERATURE

This warning lamp comes on and the alarm sounds when the coolant temperature is too high.

DANGER !

Never open the coolant filler cap or any plug of the cooling system when the engine is warm. Steam or hot fluid can spray out.

CAUTION !

If this alarm comes ON while operating the engine, stop the engine, exept in extreme emergencies. Wait for the engine to cool down. Check the coolant level, the belt condition, the raw water filter, and if the sea cock is open.

To operate an engine when temperature is too high can lead to a severe engine damage. Do not operate the engine if the problem persist and contact a Nanni representative as soon as possible.

BATTERY CHARGE

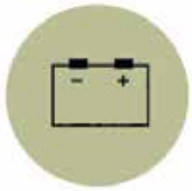

This warning lamp comes for a short time when the electric system is turned on.

Should this lamp comes on when the engine is running, this indicates that the alternator is not charging.

The cause may be a fault in the stator, in the electrical system or beacuse the alternator belt is slack.

CAUTION !

If this alarm comes ON while operating the engine, stop the engine, exept in extreme emergencies and check components of the belt system. Also check components of the electrical system (fuses, battery, etc.).

Do not operate the engine if the problem persist and contact a Nanni representative as soon as possible.

PREHEATING

This lamp turns on when the glow plugs are activated, prior to cranking the engine. This lamp goes off after a few seconds.

ENGINE OIL PRESSURE

This alarm lights up and sounds when the engine oil pressure is too low.

CAUTION !

If this alarm comes ON while operating the engine, stop the engine, exept in extreme emergencies and check the engine oil level and the oil filter condition.

To operate an engine when oil pressure is too lowcan lead to a severe engine damage. Do not operate the engine if the problem persist and contact a Nanni representative as soon as possible.

WATER IN THE FUEL FILTER

This alarm lights up and sounds when there is too much water in the fuel system (only applicable when specific device is fitted at bottom of filter housing). This alarm is not available on N2, N3 and N4 engines.

If this alarm comes on, stop the engine and drain the water in the fuel filter. As usual, before any operation on the engine, wait for it to cool down, as a safety measure.

C5 PANEL

C5 STANDARD LOOSE INSTRUMENTS

Instruments sets are available either in 12 or 24 V D.C. Panels and instruments appearance are subject to change without notice.

C5 OPTIONAL LOOSE INSTRUMENTS

See your Nanni representative for these instruments. Some of them might be available on order only.

The function of panel instruments is described in detail in the decicated Instruments manual.

C5 TACHOMETER & LCD DISPLAY

The analog tachometer displays the engine speed. Multiply the value by 1000 to get the revolutions per minute of the engine. See the example below :

ALTERNATOR CHARGE INDICATOR

Shows the voltage at the alternator terminals (posts).

STARTER SWITCH

This device allows to start and to stop the engine.

Off : The electrical circuits are off and the key can be removed.
On : The electrical supply is ON and the key cannot be removed.
Start : The starter motor is energized to crank the engine; the key returns to the ON position as soon as released.

OIL PRESSURE INDICATOR

This indicator does not show the engine oil level. This indicator shows the oil pressure in bar and psi units.

If the oil pressure in the lubrication system is too low, the acoustic alarm sounds and the relevant lamp comes ON.

If this alarm comes ON while operating the engine, stop the engine, exept in extreme emergencies. Check the oil level and the oil filter condition.

To operate an engine when oil pressure is too low, can lead to a severe engine damage. Do not operate the engine if the problem persist and contact a Nanni representative as soon as possible.

COOLANT TEMPERATURE INDICATOR

Indicates the coolant temperature. If the temperature is too high, the acoustic alarm sounds and the corresponding alarm comes ON.

If this alarm comes ON while operating the engine, stop the engine, exept in extreme emergencies. Wait for the engine to cool down. Check the coolant level, the belt condition, the raw water filter, and if the sea cock is open. To operate an engine when temperature is too high can lead to a severe engine damage. Do not operate the engine if the problem persist and contact a Nanni representative as soon as possible.

DANGER !

Never open the coolant filler cap or any plug of the cooling system when the engine is warm. Steam or hot fluid can spray out.

FUEL LEVEL INDICATOR

Displays the fuel level remaining in the fuel tank.

WATER LEVEL INDICATOR

Displays the water level remaining in the water tank for amenities (when equiped).

TRIM INDICATOR

This device displays the Stern drive tilt level (when equiped aboard) and incorporate three sectors. Be fully aware that modifying the boat trim will affect performance and behavior of the ship when cruising.

On a twin engine boat, each drive might be controled independently. In such a case, there is one trim indicator per engine. The meaning of the sectors is :

Sector 1 : is the trim angle used to adjust the boat trim at all engine speed, from idle to max rpm at wide open throttle.

Sector 2 : is the beach range to use in view to raise the propeler drive unit for running at reduced speed in shallow waters or when depth is uncertain.

The maximum engine speed allowed when the drive is in the beach range is of 1000 rpm.

Sector 3 : is used to completely lift the propeller drive unit when towing the boat. Never start nor run the engine when the drive is in the lift range.

RUDDER INDICATOR

This indicator displays the rudder angle of the vessel. Depending of the country, this may be a legal requirement. Request information from your local Nanni representative.

ELECTRONIC INSTRUMENTS

SI.4

Nanni SI.4 Electronic control displays is connected to the engine through a dedicated harness. See your Nanni representative for more information.

S05 INSTRUMENTS

NANNI CONTROL PANELS	N2.10	N2.14	N3.21	N3.30	N4.38	N4.40	N4.50	N4.65	N4.80	N4.115	N4.140	T4.205	T4.230	T4.270
Eco 4	S	X	X											
Eco 4 w/o key	X	X	X											
A4 -12 V		S	S	S	S	S	X	X	X	X	X			
A4 -24 V w/o key					X					X	X			
A4 Fly		X	X		X	X	X	X	X	X	X			
A4 Fly-loose instr		X	X	X	X	X	X	X	X	X	X			
A4 loose instr		X	X	X	X	X	X	X	X	X	X			
A4 w/o key		X	X	X	X	X	X	X	X	X	X			
A5 Fly loose instr												X	X	X
B4 - 12 V		X	X											
B4 + Indicator fuel 12 V			X	X	X	X	X	X	X	X	X			
B4 + indicator Voltmeter 12 V			X	X	X	X	X	X	X	X	X			
C4														
C4 -12 V				X	X	X	S	S	S	S	S			
C4 -12 V														
C4 - 24 V					X					X	X			
C4 loose instr				X	X	X	X	X	X	X	X			
C4 loose instr														
C4 w/o key				X	X	X	X	X	X	X	X			
C5 Pleasure CAN 10B														
C5 Pleasure CAN 5B														
C5 Pro CAN 10B														
C5 Pro CAN 5B														
C5 Fly loose instr												X	X	X
C5 loose instr												S	S	S
C5 loose instr + indicator fuel												X	X	X
C5 loose instr Z Drive												X	X	X
SI-4 LCD 12 V												X	X	X
SI-4 LCD 12 V	X	X	X	X	X	X	X	X	X	X	X			
SI-4 LCD 24 V	X	X	X	X	X	X	X	X	X	X	X			
SI-4 LCD 12 V Fly	X	X	X	X	X	X	X	X	X	X	X	X	X	X
SI-4 Pleasure LCD 24 V														
SI-4 Pro LCD 24 V														
SI-4 Pleasure LCD 12 V														
SI-4 Pro LCD 12 V														
SI-4 Pleasure LCD 24 V Fly														
SI-4 Pro LCD 24 V Fly														
SI-4 Pleasure LCD 12 V Fly														
SI-4 Pro LCD 12 V Fly														

NANNI CONTROL PANELS	T6. 280	T6. 300	6. 420 TDI	T8V. 320	T8V. 350	T8V. 370	N5 MECA	N6 MECA	N5 CR2	N6 CR2	N9 CR2	N13 CR2
Eco 4												
Eco 4 w/o key												
A4 -12 V												
A4 -24 V w/o key												
A4 Fly	X	X	X									
A4 Fly-loose instr	X	X	X									
A4 loose instr												
A4 w/o key												
A5 Fly loose instr				X	X	X						
B4 - 12 V												
B4 + Indicator fuel 12 V												
B4 + indicator Voltmeter 12 V												
C4							X	X				
C4 -12 V												
C4 -12 V	X	X	X									
C4 - 24 V												
C4 loose instr												
C4 loose instr	X	X	X									
C4 w/o key												
C5 Pleasure CAN 10B									X	X		
C5 Pleasure CAN 5B											X	X
C5 Pro CAN 10B												
C5 Pro CAN 5B											X	X
C5 Fly loose instr				X	X	X						
C5 loose instr				S	S	S						
C5 loose instr + indicator fuel												
C5 loose instr Z Drive				X	X	X						
SI-4 LCD 12 V	X	X	X									
SI-4 LCD 12 V												
SI-4 LCD 24 V												
SI-4 LCD 12 V Fly	X	X	X									
SI-4 Pleasure LCD 24 V									X	X	X	X
SI-4 Pro LCD 24 V									X	X	X	X
SI-4 Pleasure LCD 12 V									X	X	X	X
SI-4 Pro LCD 12 V									X	X	X	X
SI-4 Pleasure LCD 24 V Fly									X	X	X	X
SI-4 Pro LCD 24 V Fly									X	X	X	X
SI-4 Pleasure LCD 12 V Fly									X	X	X	X
SI-4 Pro LCD 12 V Fly									X	X	X	X

SUMMARY

S06 COMPONENTS 37
SUMMARY 37
ENGINE MAIN COMPONENTS 38
NOTES 40

ENGINE MAIN COMPONENTS

NOTE !

Minor engine details may not be exactly as shown. Some components may not be part of the engine ordered. Not binding pictures.

P/N	COMPONENTS
1	Alternator
2	Alternator Belt
3	Starter
4	Fuses box
5	Air filter
6	Fuel filter
7	Fuel feed pump
8	Fuel injection pump
9	Heat exchanger
10	Coolant filler plug
11	Coolant pump
12	Recovery tank
13	Heat exchanger drain plug
14	Raw water pump
15	Oil filter
16	Oil filler port
17	Oil gauge
18	Water cooled exhaust elbow
19	Transmission
20	Coolant drain plug

ENGINE VIEWS N3.21- N3.30

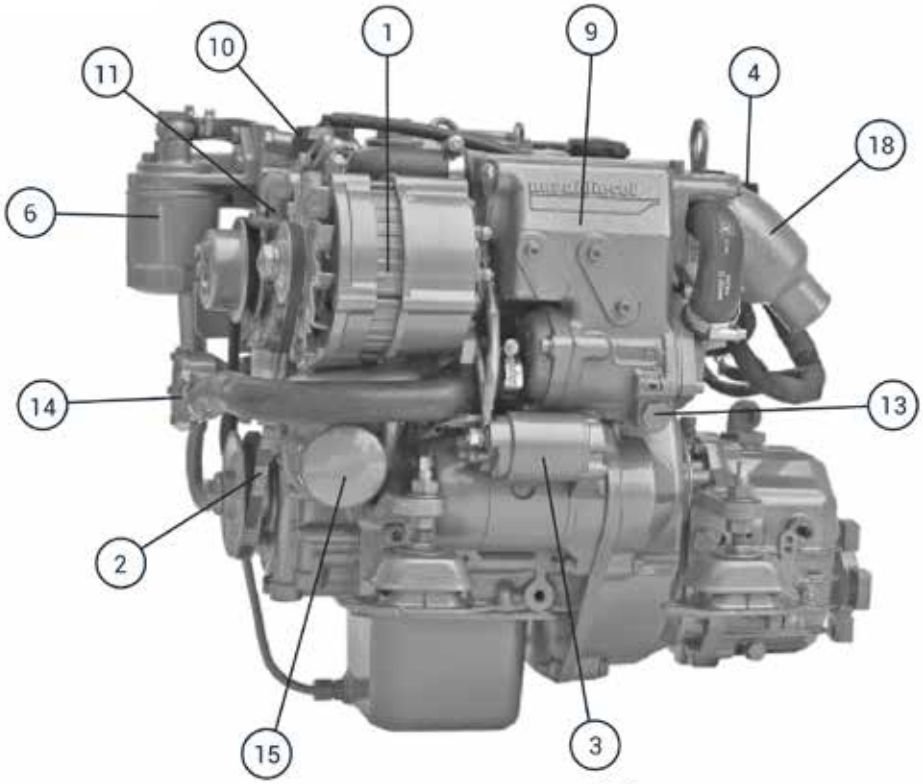

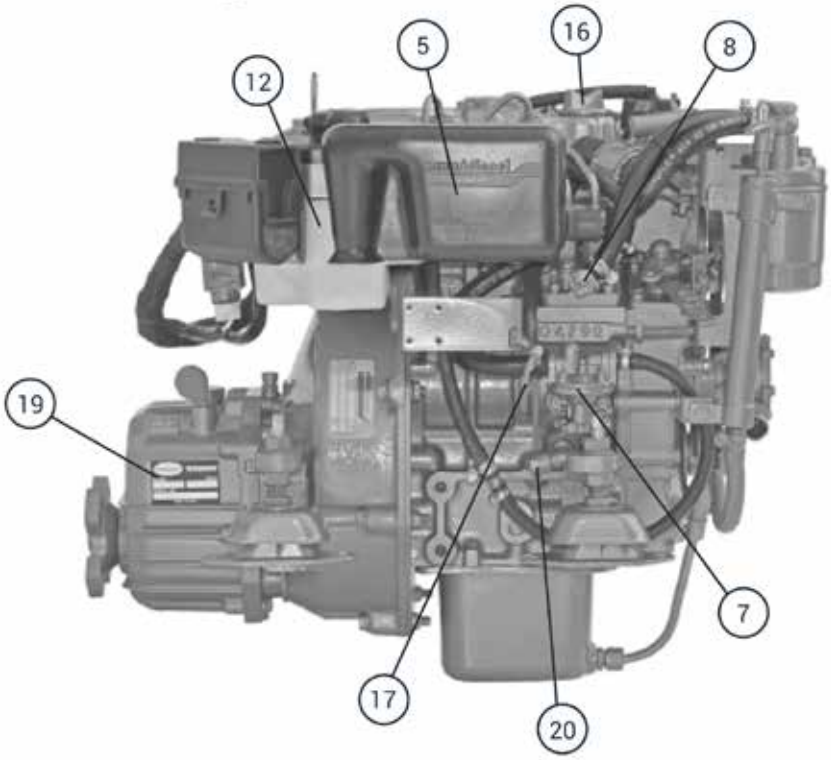

NOTES

SUMMARY

S07 STARTING & RUNNING 41
SUMMARY 41
BEFORE STARTING 42
ENGINE INSTALLATION 42
FUEL SYSTEM 42
RAW WATER SYSTEM 42
ELECTRICAL SYSTEM 42
CHECK BEFORE STARTING 43
STARTING THE ENGINE 43
COLD WEATHER OPERATION 43
ENGINE START 44
ENGINE STARTED 46
STARTING WITH BOOSTER BATTERIES 46
ENGINE RELUCTANT TO START 46
IDLING ENGINE 46
NORMAL ENGINE OPERATION 47
BREAK IN 47
POWER TAKE OFF 47
REMOTE CONTROL 48
RUNNING 48
BEHAVIOUR OF THE BOAT 48
DURING OPERATION 48
CRUISING SPEED 49
MANOEUVRING 49
ENGINE AND SAILING 50
TROLLING VALVE 50
AFTER RUNNING 51
STOPPING THE ENGINE 51
AFTER STOPPING THE ENGINE 51
ANCHORING 52
COLD WEATHER PRECAUTIONS 52

BEFORE STARTING

ENGINE INSTALLATION

See Installation manual

FUEL SYSTEM

The fuel is drawn from the tank by the fuel feed pump and is injected into the combustion chamber by the injection pump. A fuel filter is placed between the feed pump and the injection pump.

The injection pump delivers a larger amount of fuel than required for combustion. The fuel that is not burned is re-injected into the tank through an over-flow pipe.

CAUTION !

The injection pump is an extremely precise unit. Water entry in the fuel system will cause major failure to the injection pump and to the whole fuel system.

A fuel prefilter with a water separator should be installed between the fuel tank and the fuel filter on the engine. The prefilter should be installed as close as possible to the engine fuel filter. It must never be installed on the engine as vibrations affect the water/fuel separation process.

If the fuel tank is located below the engine injection pump, an additional electric fuel feed pump should be installed between the prefilter and the feed pump of the engine.

RAW WATER SYSTEM

The raw water system allows to cool the engine coolant and the exhaust gas.

Raw water is drawn into the heat exchanger by the engine raw water pump. The raw water is drained via the exhaust elbow, where it is mixed with exhaust gases.

The siphon breaker prevents raw water entry into the cylinders via the raw water/exhaust system.

NOTE !

The use of a siphon breaker is mandatory if the exhaust elbow is under the waterline at full load or at less than 200 mm above it. A siphon breaker is mandatory in all Sail Boat and when there's a risk of water entry in the engine.

A raw water filter must be fitted between the raw water intake and the raw water pump of the engine.

ELECTRICAL SYSTEM

The engine extension harness should be away from any water projection and must be correctly attached as high as possible in the hold.

Engines in metallic hulls are generally fitted with a two-pole electrical system. This system allows to electrically isolate the engine from the electrical ground of the boat.

The alternator belt drives both the coolant pump and the alternator. Additional belt can also be fitted.

CHECK BEFORE STARTING

WARNING !

Put all the protective covers back before starting the engine.

CAUTION !

Open the sea cock before starting the engine. The raw water pump impeller will be damaged if it runs dry even for few seconds, and may lead to engine overheating.

Perform all of the following operations before starting the engine :

1. Open sea cock. Prime the raw water system if necessary.

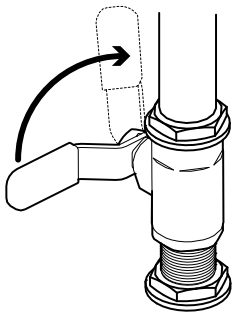

2. Start the compartment fan (if fitted) for at least five minutes. Otherwise, open the hold.
3. Check that there is sufficient fuel.
4. Move the control lever to the neutral position.
5. Open fuel cock, prime the system if necessary.
6. Check the engine and transmission oil level and fill with the recommended oil if necessary.
7. Check the coolant level, top up if necessary.
8. Check the mechanical control cables, lubricate as required.
9. Check there are no fuel, oil, coolant or water leaks.
10. Check the alternator belt.
11. Turn ON the main battery switch.

START THE ENGINE

DANGER !

The propeller can cause serious injury when rotating. Check that nobody is in the water near the propeller before starting. Never use a start spray or any other equivalent product These products are highly flammable.

CAUTION !

Always preheat the engine. Never race the engine while it is cold. Do not crank the engine continuously for more than 10 seconds at a time. Let it cool down for 2 minutes between cranking attempts. Failure to follow these guidelines may result in starter motor burnout.

NOTE !

If the engine does not start after 3 attempts, remove the key and drain the water in the waterlock. Failure to do so may lead to water ingress in the cylinders. When starting the engine for the first time, let it run at idle for several minutes and check for leaks or malfunction.

COLD WEATHER OPERATION

NOTE !

Engines may be equipped with coolant heaters as cold weather starting aids. Engine coolant heaters should be used when temperatures are at or below 0 °C (32 °F).

Turn on the engine coolant heater for a minimum of 2 hours before starting the engine. Additional information on cold weather operation is available from your Nanni engine distributor or authorized servicing dealer.

Synthetic oils improve flow at low temperatures, especially in arctic conditions.

ENGINE START

With key Type 4 :

1. Move the control lever to the neutral position.

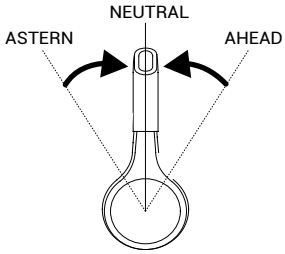

2. Insert the key in the ON/STOP starter switch.

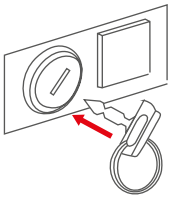

3. Turn the key a quarter-turn to the right (on C4 and A4 panel). All the warning lamps come on and the acoustic alarm sounds. After a few seconds, only the engine oil pressure and Battery charge lamps do lit.

NOTE !

On Eco 4, only the oil pressure and battery charge lamp light on.

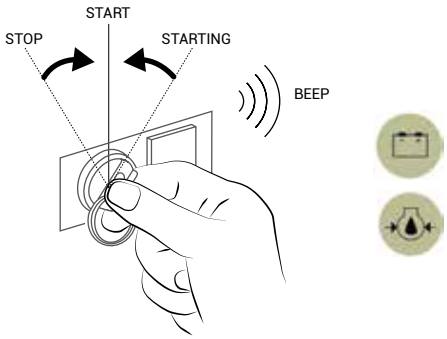

4. Press the Start button halfway (position 1/2) to start preheating. Hold the button for 10 to 20 seconds, depending on ambient temperature to preheat the engine.

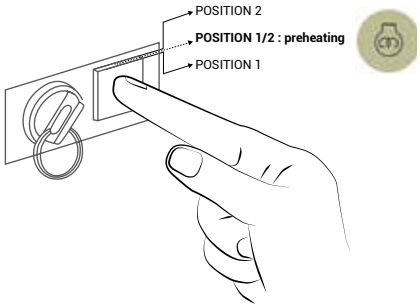

5. Press fully to start the engine (position 2). Once the engine has started, release the button, all lamps go out.

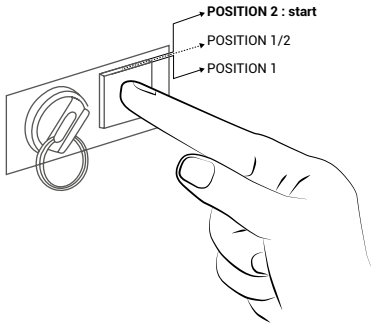

6. If the engine is fit with water cooled exhaust elbow, check that water flows from the exhaust outlet at the hull. If the water does not flow, stop the engine and check the raw water system.

Without key :

1. Switch the key of the main panel to ignition (if equipped).
2. Move the control lever to the neutral position.

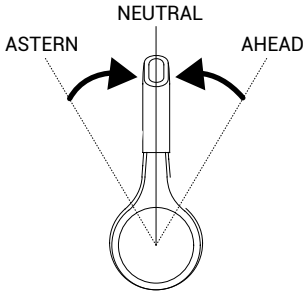

3. Press the ON/STOP button. All the warning lamps come on and the acoustic alarm sounds (on C4 and A4 panel). After a few seconds, only the engine oil pressure and Battery charge lamps remain lit.

NOTE !

On Eco 4, only the oil pressure and battery charge lamp light on.

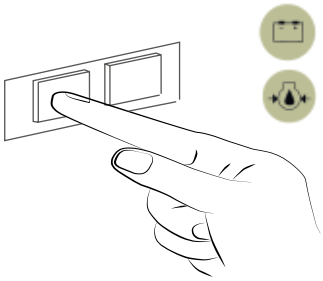

3. Press the Start button halfway (position 1/2) to start preheating. Hold the button for 10 to 20 seconds, depending on ambient temperature to preheat the engine.

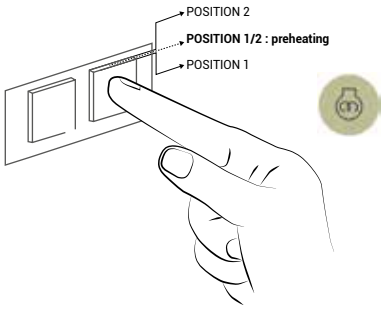

4. Press fully (position 2) to start the engine. Once the engine has started, release the button, all lamps go out.

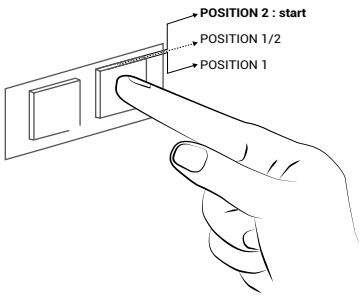

5. If the engine is fit with water cooled exhaust elbow, check that raw water flows from the exhaust outlet at the hull. If the water does not flow, stop the engine and check the raw water system.

Electronic type 5:

Turn the ignition key to the ON position.

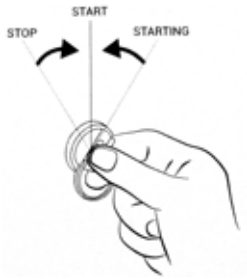

It is not required to start the engine for system initialization. The tachometer will start an autimatic self-test at every powering up. This self test is as follows :

1. The L.C.D screen displays the current inbed software.

2. All dial indicators will be checked : pointers will sweep up to full scale, then will return to the current value;

3. when self-test is completed, the LCD screen will display data.

4. If the C5 is powered for the first time, the user will be prompted to the system set-up.

ENGINE STARTED

NOTE !

To insure adequate lubrication, operate engine at or below 1200 rpm with no load for 1-2 minutes. Extend this period to 2–4 minutes at freezing or sub-zero temperatures.

1. Check oil pressure gauge as soon as engine starts. If gauge needle does not level up to minimum oil pressure specification within 5 seconds, stop the engine and determine the cause.
2. Watch coolant temperature gauge. Do not place engine under full load until properly warmed up.

It is a good practice to operate the engine under a lighter load and at lower speeds than normal for the first few minutes after start-up.

STARTING WITH BOOSTER BATTERIES

CAUTION !

Make sure to use batteries with the same rated voltage as the engine's system voltage. On an engine with a two pole electrical system, connect the other end of the jumper cable to the negative pole (-) of the booster battery.

1. Connect the jumper cable to the positive pole (+) of the flat battery, then to the positive pole (+) of the booster battery.
2. Connect the jumper cable to the negative pole (-) of the booster battery. Connect the other end to a bolt of the engine block.

Start the engine following the starting procedure.

3. Let the engine run at idle for few minutes to charge the battery.
4. Stop the engine and remove the cables in the exact reverse order from installation.

ENGINE RELUCTANT TO START

If a water lift (water lock) muffler is installed on the exhaust line, excessive cranking could cause seawater to enter the cylinders and damage the engine. To start engine, reduce starting attempts to three and if not OK, undertake to do this :

1. Close the seacock to avoid filling the muffler with water.
2. Try to start the engine by following the regular starting procedure.
3. When the engine does start, stop the engine immediately and turn off the switch.
4. Re-open the seacock and restart the engine.

IDLING ENGINE

Avoid excessive engine idling as it may cause the coolant temperature to fall below its normal range. This, in turn, causes crankcase oil dilution, due to incomplete fuel combustion, and permits formation of gummy deposits on valves, pistons, and piston rings. It also promotes rapid accumulation of engine sludge and unburned fuel in the exhaust system.

Once an engine is warmed to normal operating temperatures, engine should be idled at slow idle speed. Slow idle speed for engine is set at the factory. If an engine is left idling for more than 5 minutes, stop and restart later.

Above : typical temperature and pressure Type 5 and 4 gauges

NORMAL ENGINE OPERATION

Check engine coolant temperature and oil pressure. Temperatures and pressures will vary between engines and with changing operating conditions, temperatures, and IIf coolant temperature rises above the maximum coolant temperature, reduce load on engine. Unless temperature drops quickly, stop engine and determine cause before resuming operation.

Operate the engine under a lighter load and at slower than normal speed for first 15 minutes after start-up. DO NOT run engine at slow idle unless necessary for maneuvering out of dock and harbor.

Stop engine as soon as possible if there are any signs of part failure. Symptoms that may be early signs of engine problems are :

- Sudden drop in oil pressure
- Abnormal coolant temperatures
- High marine gear oil temperature
- Unusual noise or vibration
- Sudden loss of power
- Excessive black exhaust
- Excessive fuel consumption
- Excessive oil consumption
- Fluid leaks

BEFORE RUNNING

BREAK IN

Operate the engine with care for the first 50 hours of operation.
Do not race the engine while it is cold. Do not operate it at full load except for short periods. Never run the engine at constant engine speed for long periods during the break in period.

Check the oil and coolant level frequently during the running-in period. The oil consumption can be more important during the running in period.

See Maintenance section.

POWER TAKE OFF

Some engines can be fit with a Power Take Off system. This system allows to power accessories like bilge pump, watermaker, etc.

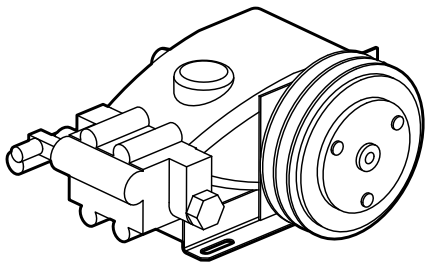

NOTE !

Any mechanical power taken from the engine from a PTO reduces the power delivered to the propeller. The use of a PTO should always be studied and approved by the R&D department of Nanni Industries S.A.S France. Contact your Nanni dealer for more informations.

REMOTE CONTROL

The remote control is an optional extra not in the scope of supply of the engine. The remote control installed on the boat can be different than the ones shown in this document.

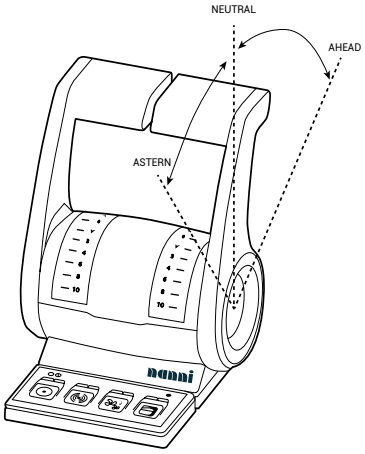

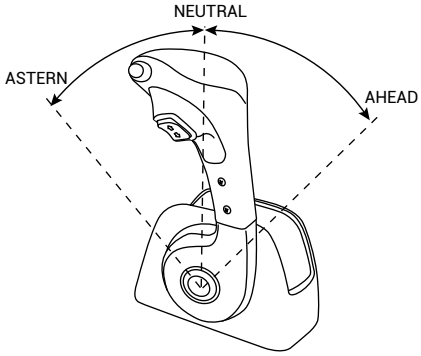

On most boats, the control lever controls both the engine rpm and the gear shift (ahead / astern). However, some boats can be equipped with a separated shift command.

It can also be fitted with a neutral safety switch that prevents the engine from starting until the lever is in neutral position.

Consult the boat builder or your Nanni dealer if you are not sure about the operation of the remote control.

RUNNING

BEHAVIOUR OF THE BOAT

If this is your first boat or if you are not familiar with the boat, we urge you to practice controlling the boat at slow speed as a first step. Avoid violent manoeuvres or unexpected speed changes while sailing. People can fall over or overboard.

Keep also in mind that the weight distribution (passengers, equipments, etc.) inside the boat has an impact on the behaviour of the boat when cruising. Depending the position of the load, the behaviour of the boat may change, particularly in the case of a planning hull.

The condition of the hull and the propeller is also a critical factor. A dirty and / or damaged hull will modify the behaviour of the boat and therefore the engine performance. It can also cause cavitation which can seriously erode the surface of the propeller, the drive, etc.

DURING OPERATION

NOTE !

Never press the START button when the engine is running.

The solenoid of the starter motor would push up the cog and make the starter motor to start, against the turning flywheel of the engine already in motion. This action would destroy the starter motor.

Check the instruments and warning lamps after starting, and regularly when cruising.

CRUISING SPEED

A recommended engine speed is given in the ***SPECIFICATIONS*** section to help you to set your cruising speed.

NOTE !

Always consider sailing conditions and load of the boat to set the cruising speed.

Operating the engine at wide open throttle should be avoided since it is both uncomfortable and uneconomical. Note that operating the engine at a too low rpm for a long period could lead among other things to increased oil consumption.

Deposits may also form in the injection system if the engine do not reach its nominal operating temperature regularly. Run the engine at full throttle regularly in order to burn off any possible deposits in the fuel system.

MANOEUVRING

WARNING !

Shifting at high speed can damage both the engine and the transmission and be dangerous for passengers.

CAUTION !

On a twin engine boat, both engines should be started during reversing manoeuvres to reduce the risk of water ingress in the stationary engine.

Carry out the following operations for forward / reverse manoeuvres :

1. Reduce engine speed to idling and, if possible, let the boat lose most of its speed.
2. Move the control lever to the neutral position and wait a few seconds.

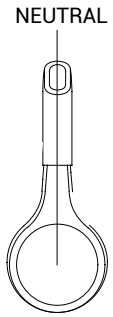

3. Move the control lever into astern. Increase the speed.

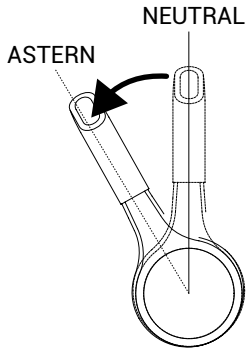

ENGINE AND SAILING

When under sail, it is possible to limit the resistance produced by the propeller of the engine.

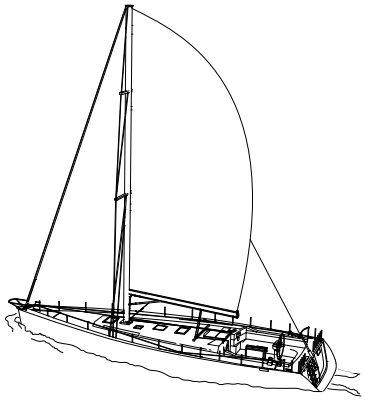

CAUTION !

Refer to the manufacturer's recommendations regarding the use of the transmission in sailing condition.

Propeller blades :

Foldable blades :

- Put the throttle lever astern (in reverse). The blades will close as soon as the boat moves forward. Hydrodynamic resistance created by the blades is then reduced and minimized.

Non foldable blades :

- Put the throttle lever astern (in reverse). The propeller does not rotate and create a hydrodynamic resistance.
- Put the lever in neutral, the propeller will rotate and will generate a lower hydrodynamic resistance than in astern.

CAUTION !

Sailing with the engine stopped and with the lever in neutral must not exceed 6 hours in a row. The propeller can drive the rotation of the shaft and damage the transmission. Run the engine for 15 minutes to lubricate the transmission at least every 6 hours.

Whatever the type of propeller and transmission, never sail with the engine stopped in forward gear (in ahead mode).

Under sail, close the seacock if the boat is reaching a speed above 8 knots.

Water can enter in the raw water intake and fill the exhaust system. Do not forget to open the seacock again before restarting the engine.

TROLLING VALVE

The Trolling valve system allows to reduce the rotation speed of the propeller below its speed when the engine is at idle. The boat speed is reduced by 30% to 70%.

CAUTION !

The Trolling valve system must never be used for manoeuvring. It also must never be used at an engine speed of more than 1200 rpm (refer to Gear Box operating manual).

AFTER RUNNING

STOPPING THE ENGINE

CAUTION !

Never stop the engine by using the main switch. This could damage the electrical system.

Before stopping the engine, let it run at idle in neutral for few minutes, especially if the engine has been operated at high speed and load. This will allow the coolant to cool down the engine.

1. Start the fan in the engine compartment (if fitted) or open the hold.
2. Turn the key of the starter switch counter-clockwise, the engine stops and all indicators turn off. The engine stops, all lamps go out. For panel without key, press the ON/STOP button and release it. The engine stops. Turn the key of the main panel counter-clockwise. All indicators will turn off.

AFTER STOPPING THE ENGINE

CAUTION !

Even after the engine has stopped, some components and fluids will remain hot and under pressure for several minutes. As far as possible, limit works on the engine immediately after stopping it. Allow it to cool down first.

After the engine has stopped :

1. Turn off the main switch.
2. Close the sea cock and the fuel cock.

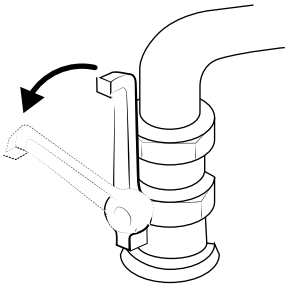

3. Inspect the engine compartment and check for leaks.

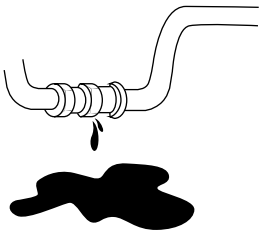

CAUTION !

If the boat is being towed, put the lever in neutral, stop the engine and close the sea cock to prevent the engine from being filled with raw water.

On a twin-engine boat, if cruising with a single engine, close the sea cock of the stopped engine.

Do not forget to open the sea cock before restarting the engine.

ANCHORING

If the boat is not going to be used for some time but is being left in the water, the engine must be run to operating temperature at least once every 2 weeks. This prevents corrosion in the engine.

When the boat is at anchor or in port for an extended period of time, vegetation may develop on the hull, the keel, the drive, the rudder, the propeller, etc. It will significantly affect the behaviour of the boat and the performance of the engine if the vegetation is not removed before the next time the boat is used.

Vegetation and fouling can also obstruct the raw water system and result in damage to the engine by overheating.

Inspect and clean the boat and the raw water system each time the engine is used. Clean if necessary. If the boat is removed out of water, clean the hull and spray a coat of anti-fouling. Never paint the anodes.

Furthermore, when the boat is at anchor or in port for an extended period, water can fill the exhaust system via the exhaust outlet. It is necessary to drain regularly the waterlock when the boat is at anchor.

COLD WEATHER PRECAUTIONS

See Maintenance Section for complete details.

CAUTION !

A poorly charged battery may burst as a result of freezing.

SUMMARY

S08 MAINTENANCE 53
SUMMARY 53
ABOUT 54
MAINTENANCE INTERVALS 55
GENERALITIES 56
CONTROL CABLES 56
EXHAUST SYSTEM 57
AIR INTAKE 57
CHECK THE AIR FILTER BOX 57
FUEL SYSTEM 58
DRAIN WATER IN FUEL PREFILTER 58
REPLACING THE FUEL FILTER 59
AIR BLEEDING 60
LUBRICATION SYSTEM 61
OIL LEVEL - ADDING ENGINE OIL 61
DRAINING THE ENGINE OIL 62
CHANGING THE OIL FILTER 62
COOLING SYSTEM 63
OVERVIEW 63
COOLANT 64
COOLANT LEVEL 64
DRAINING THE COOLANT CIRCUIT 65
COOLANT - FILLING 65
RAW WATER SYSTEM 66
SIPHON BREAKER 66
EXTRACT THE RAW WATER PUMP IMPELLER 67
CLEANING THE RAW WATER FILTER 68
RAW WATER SYSTEM - DRAINING 68
RAW WATER SYSTEM 69
69
ELECTRICAL SYSTEM 70
WIRES AND CONNECTORS 70
BATTERY 70
KEEP CLEAN THE BATTERY 70
DISCONNECT THE STARTER CABLES 70
CONNECT THE CABLES 71
BATTERY ELECTROLYTE LEVEL 71
CAMSHAFT TIMING 74

ABOUT

This manual is describing preventive maintenance operations to be carried out by the owner/operator of the engine. This is not a workshop repair manual.

Carrying a set of preventive maintenance operations in accordance with the service intervals will ensure engine optimal reliability and service life.

During the warranty period, it is essential to get any work carried out by a Nanni authorized workshop. Furthermore, any service should be registered in the Nanni after-sale system.

However, some regular checks, particularly those made every time the engine is used, are of the duty of the user. Some operations are explained further on for you to work on the engine in case of an emergency or if there is no repair workshop nearby.

We recommend to have all your works checked by a Nanni authorized workshop.

Repairs and/or adjustment works on the engine by unseasoned marine trained technicians is forbidden for obvious safety reasons. Improper works endangers life, even not at open sea. Operations on valve timing and injection system belong to the exclusive domain of Nanni trained representatives. These may be against EPA or other worldwide environmental regulations.

NOTE !

The service intervals and relevant informations about the preventive maintenance of the transmission are indicated in the user manual provided by the manufacturer of the transmission. Contact your Nanni representative for further information regarding the maintenance of the transmission.

The hourmeter has no reset capability and displays the total operating hours of the engine since factory acceptance tests.

MAINTENANCE INTERVALS

COMPONENTS	PERIODICITY				
	Daily	1st Maintenance 30 days or 25 hours (1)	Every 250 hours or 1 year (1)	Every 500 hours or 2 years (1)	Every 1000 hours or 4 years (1)
Fuel Circuit					
Water in fuel - Pre-filter / Filter Draining	○				
Fuel filter (2)		●	●		
Fuel injectors					○
Lubrication Circuit					
Engine oil level (2)	○				
Engine Oil (2)		●	●		
Oil filter (2)		●	●		
Cooling Circuit					
Coolant level (2)	○				
Coolant Liquid (2)				●	
Thermostat Inspection (2)				●	
Calibrated Heat-Exchanger Cap (2)				●	
Heat-exchanger - O-rings				●	
Inter-cooler - O-rings (4)				●	
Raw Water Circuit					
Raw Water Filter Check & Clean	○				
Raw Water Filter (2)	○				
Raw Water Pump Impeller(2)			●		
Zinc Anodes (2)		○	○		
Air Intake & Exhaust Circuit					
Turbo-charger Inspection (4)				○	
Turbo Waste-Gate Free Movement & Lubrication (4)			○		
Turbo-charger Heat Insulator (4)			○		
Air Intake Filter (2)			○		●
Exhaust Mixer Inspection (2)			○		●
Electrical					
Battery electrolyte level	○				
Electrical Harness Connectors Inspection		○	○		
Alternator Belt Tension (2)		○	○		
Panel Command : Indicators & Warning Lamps		○	○		
Whole Engine					
Engine Mounts Inspection		○	○		●
Engine Alignment		○			○
Hoses / Clamps tightness / Bolts / Nuts Tightening		○	○		
Visual Inspection (Coolant, fuel, oil, exhaust & raw water leaks)	○				
Valve Clearance					○
Transmission					
Transmission Oil level (3)	○				
Transmission Oil replacement (3)		●	●		
Transmission Oil Filter replacement (3)		●	●		
Transmission Oil Cooler (4)				○	

(1) Whichever come first (at the first occurrence)
(2) Operations to be performed in accordance with user and maintenance manual for your engine. For all technical information specific to your engine, refer to the user and maintenance manual.
(3) Operation to be perform in accordance with the manufacturer user and maintenance manual
(4) The engine from N2.10 up to N2.50 are not concerned.
(5) If equipped.

● REPLACE ○ CHECK/ADJUST/CLEAN/SERVICE

GENERALITIES

WARNING !

Perform maintenance operations having the engine stopped and cold. Get the the starting key out from the panel, put it in your pocket and turn off the power supply.

Read this whole chapter and take all safety precautions before contemplating any maintenance or repair work. Make sure you understand how to perform every operation.

CAUTION !

Clean the engine before any maintenance. Watch for any oil or fluid drop as it is an evidence of a leak somewhere.

CAUTION !

Do not let oil, fuel or grease deposits build up around the engine as they may increase the risk of fire in the engine compartment. Furthermore, these deposits may hide potential heavy unseen failures.

CONTROL CABLES

The engine rpm and the gearbox shift command may be controlled by mechanical control cables connected to the control lever.

Adjust the tightness of the cable as required. If any defect appears (rust, crack, etc.), the control cable must be replaced.

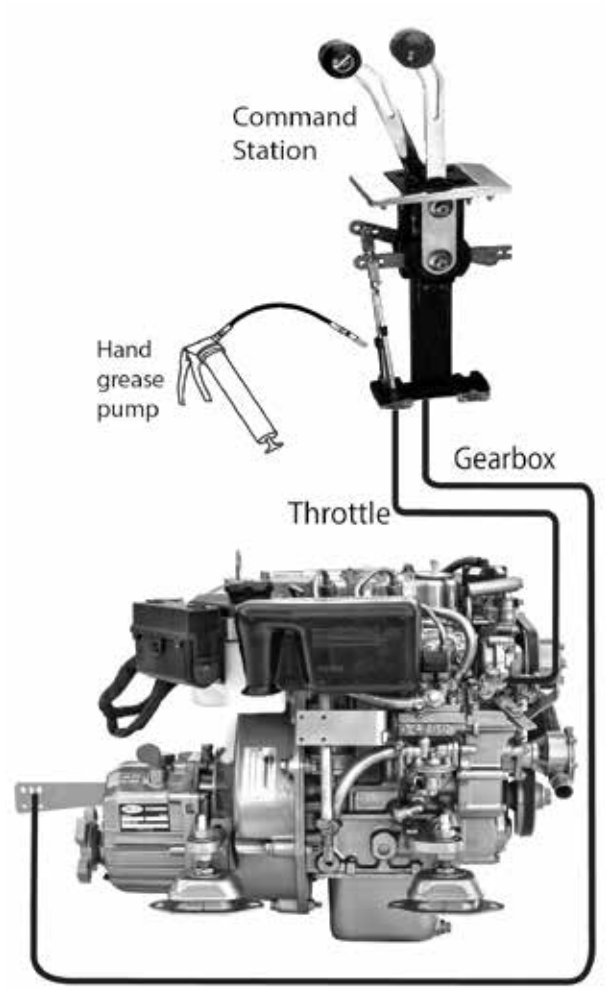

EXHAUST SYSTEM

An engine's exhaust system must be able to freely discharge all high temperature exhaust gas after combustion to the outside air.

Exhaust resistance must be as low as possible in order to prevent a decrease in power, however exhaust noise must be kept at an acceptable level. Careful design is required to reconcile these two conflicting factors. Exhaust gas from the exhaust manifold can either be directly fed into the muffler or routed to a place which will not interfere with the operator by exhaust pipe. The most important point in all cases is to reduce back pressure to a minimum.

Inspect the exhaust system at whole (hoses, clamps, mixing elbow, manifold, etc.) Check for cracks, leaks and rust. Tight or change them if necessary.

Check for carbon or soot deposits on exhaust components as it is a conclusive sign of an exhaust leak.

Should any defect appear on any item of the exhaust system, replace it as there is a risk of exhaust leakage or water penetration in the engine.

During any dismantling of the exhaust system, replace the exhaust seal gasket(s).

AIR INTAKE

WARNING !

Carry out these operations when the engine is stopped and cold. Make sure that no dust or dirt enter the intake manifold.

The reliability and the performances of the engine depend among other things on the quantity and the temperature of the global air intake design.

CHECK THE AIR FILTER BOX

1. Remove the holding clamps and remove the filter box (in dark grey on the picture).
2. Open it and clean the inside with dry compressed air. Finish with a non flint clean cloth.
3. If the air filter box is crushed, flattened or punched, replace it.
4. Install the new filter with new clamps. Do not overtight, and not damage the inlet box mouth.

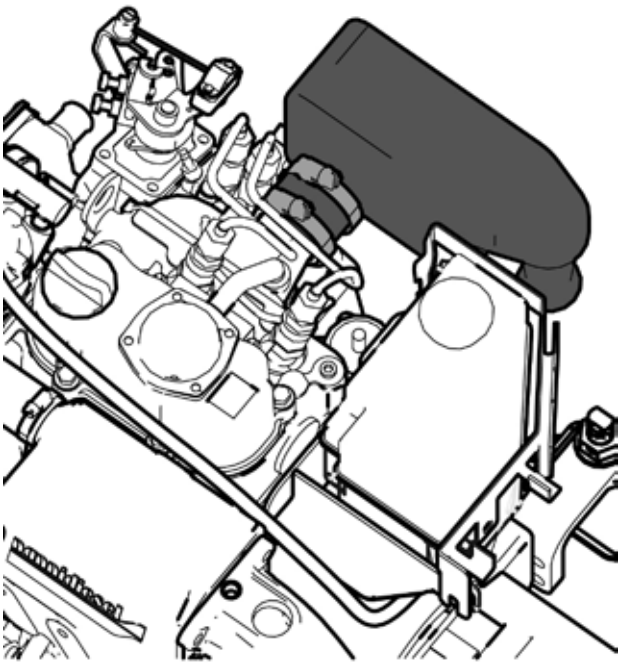

FUEL SYSTEM

DANGER !

Stop the engine and let it cool down before refuelling or carrying out any operation on the fuel system.

CAUTION !

Fuel is flammable and can be dangerous. Fuel spilled on hot surfaces or near sparks can ignite. Do not step onto the injection pipings. Take care to always keep them in good condition.

WARNING !

Total cleanliness must be guaranteed when working on the fuel system. No impurities should enter the injection system. Make sure not to spill fuel on nearby hoses.

NOTE !

Any work on the fuel injection system must be carried out by a authorized Nanni technician.

Check regularly the condition of the components of the fuel system (hoses, filter, clamps, etc). When a clamp is removed, replace it by a new one, always in stainless steel.

WARNING !

The fuel feed pump is an extremely precise unit. Water entry in the fuel system will cause major failure to the injection pump and to the whole fuel system.

DRAIN WATER IN FUEL PREFILTER

The fuel prefilter is an optional extra not in the scope of supply of the engine. The model of prefilter may vary according to the boat.

NOTE !

Drain the water out of the prefilter several hours after the engine has been stopped (when completely cold).

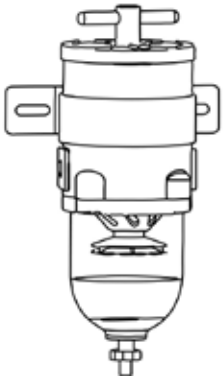

1. Close the fuel butterfly (control) valve on the fuel tank.
2. Place a suitable container under the fuel prefilter. Get floorcloths at hand to mop up any fuel which may spill. Drain water and remove impurities in opening the bottom plug.
3. Tighten the plug once the water has been drained.
4. Check the fuel filter element, change it if necessary.
5. Open the fuel butterfly (control) valve.
6. Bleed the fuel system (see in the following paragraphs).
7. Start the engine and check for leaks.

REPLACING THE FUEL FILTER

NOTE !

To ease up the air bleeding during fuel filter replacement, the filter assembly may be filled with some fuel, only if you are sure not to spill any.

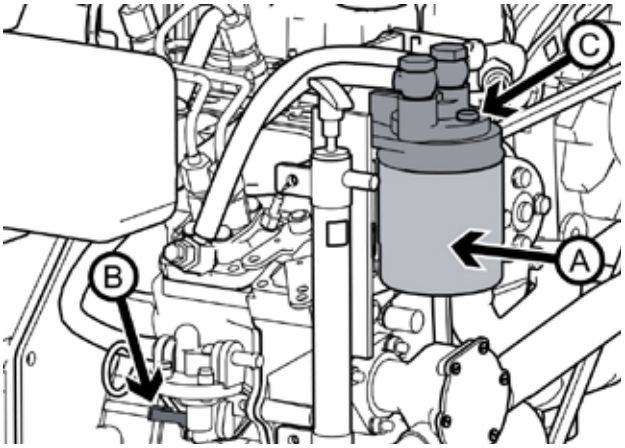

Above picture : fuel filter removal on N3.21 - N3.30.

1. Close the fuel butterfly (control) valve. Wipe up the holding filter bracket with a clean non lint cloth.
2. Remove the protective tank.
3. Put a plastic bag over the filter **A** to prevent spills on the engine.
4. Remove the fuel filter. Use a filter wrench tool if filter is seized.
5. Check and clean the sealing surface of the filter bracket. Apply a thin film of fuel onto the seal.
6. Screw the new filter by hand until the seal is flush with the matting surface. Thight up a further half turn.
7. Open the fuel butterfly (contol) valve and bleed the air in the fuel system by pumping on with the hand pump **B** until you feel a pressure in the pump (you will feel a reverse force coming from the pump).

AIR BLEEDING

Bleeding the air in the fuel system might be required :

- After a maintenance operation on the fuel system.
- If the fuel tank has been emptied.
- The engine has not been started for a long time.

To bleed the fuel system fitted with the standard mechanical pump :

1. Fill up completely the fuel tank. Open the fuel valve.
2. To avoid spills, Dispatch a non flint cloth around the venting screw **C** of the fuel filter holder and loose it up.
3. Pump the fuel using the lever **B** back and forth until fuel free of air bubbles flows out of the venting screw.

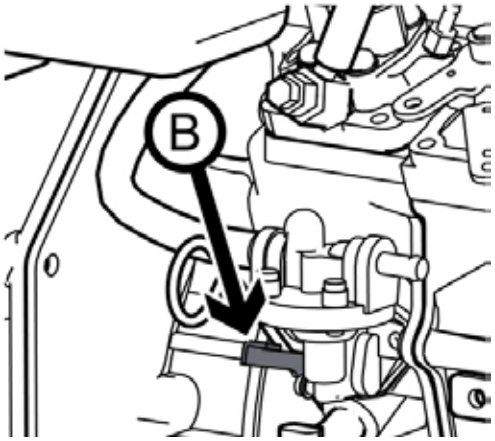

NOTE !

The mechanical fuel pump is functioning through the intermediate of an internal cam in the engine. Should this cam be in high position, the lever movement will be too small to operate. Turn the crankshaft a fraction to free the lever.

4. At this stage, you can tighten the venting screw.
5. Pump a few more times to make sure to prime completely the system.

To bleed the fuel system fitted with an additional electric fuel feed pump :

1. Fill completely the fuel tank. Open the fuel valve.
2. Loose the venting screw **C**. Dispose floorcloths around the venting screw.
3. Start the engine for 5 to 10 seconds to let the electric fuel feed pump bring fuel up to the injection pump.
4. Pump the fuel using the lever **B** until fuel free of air bubbles flows from the venting screw.
5. At this stage, you can tighten the venting screw.
6. Pump again a few more times to make sure to prime completely the system.

CAUTION !

Avoid draining all fuel from the filter <u>during</u> this process

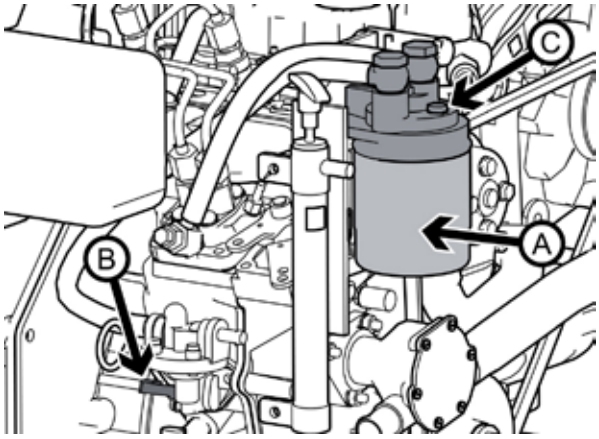

Bleeding air on N3.21 (vent C)

LUBRICATION SYSTEM

CAUTION !

Never over-fill the engine oil crankcase.

NOTE !

With a new or reconditioned engine, oil and oil filters must be replaced after 20 hours of operation. Use oil grades as indicated in the section ***TECHNICAL DATA***.

Warranty claims may be rejected if unsuitable oil grade has been used.

The viscosity may be adapted depending the climatic conditions.

OIL LEVEL - ADDING ENGINE OIL

Check the engine and transmission oil level before starting the engine. The oil level should be within the range indicated on the dipstick, between the Mini and Maxi level.

To check the oil level :

1. Pull off and wipe the dipstick (in red in the picture below).
2. Re-insert and remove the dipstick.
3. Check that the oil level is between the Mini and Maxi marks.
4. If the level is too low, remove the oil filler cap and add some oil slowly at a time. Wait a few minutes before checking the oil level to allow the oil to get down to the oil pan.

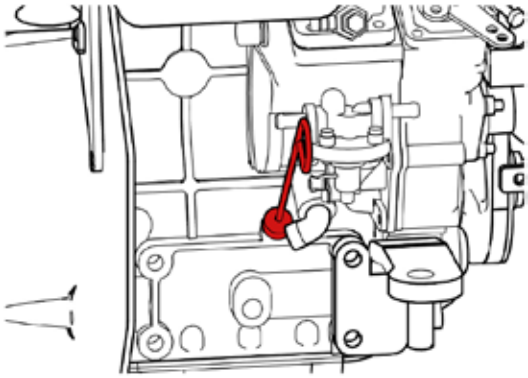

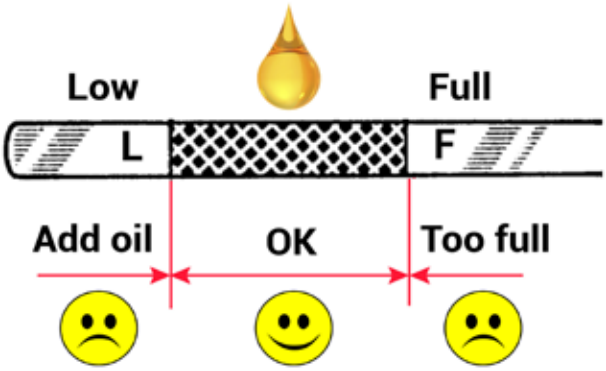

NOTE !

To top up oil level, use the same oil which is in the engine. Do not mix different types of oil.

DRAINING THE ENGINE OIL

Principle of operation :

1. Start the engine and let it warm a few minutes to render oil more fluid to ease suction.
2. Stop the engine and remove the key from the panel.
3. Connect a hose to the drain pump and place a container under the disposal hose.
4. Remove the drain plug (bolt).
5. Pump all used oil out from the pan.
6. Disconnect the oil drain pump and replace the cap on the drain pipe.

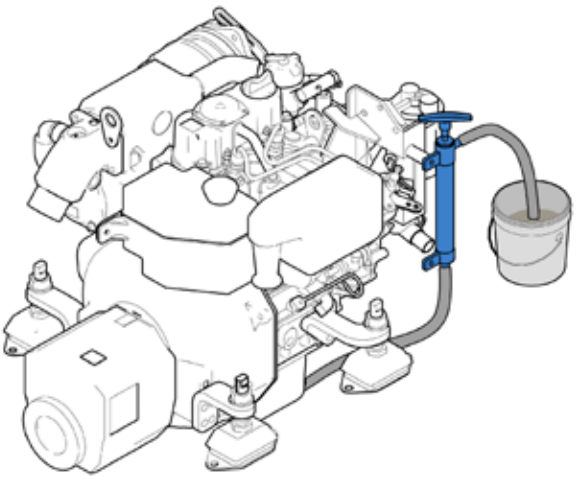

On model N3.21 - N3.30, oil draining pump is fitted on the engine.

CHANGING THE OIL FILTER

Replace the oil filter every time the engine oil is drained.

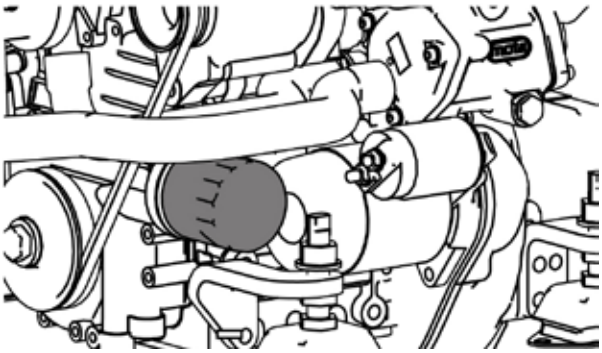

1. Remove the oil filter with a filter wrench tool. Turn the filter counter-clockwise (CCW). Remove the gasket.
2. Clean the mating surface in order to prevent impurities from entering the engine.
3. Apply a film of oil on the new gasket. Screw the new filter by hand with the new gasket. When the gasket contacts the mating surface, turn the filter a half turn.
4. Fill with proper amount of new oil. Check for leaks and check the oil level.
5. Start the engine and let it operate few minutes at idle. Check if the oil pressure warning lamp turns off.
6. Stop the engine, wait for the engine to cool down and check the oil level. Top up if necessary.

COOLING SYSTEM

OVERVIEW

The cooling system cools the engine in order to maintain a proper operating temperature and to prevent overheating. On some engines, the cooling system also cools the fuel, the oil or the air intake. The cooling system is built around two circuits:

- The COOLANT CIRCUIT which is the engine internal cooling system. It is a closed-circuit in which coolant flows and cools the engine.
- The RAW WATER CIRCUIT which cools the coolant via an heat exchange with raw water. Nanni engines are delivered as standard with an heat exchanger, in which the coolant is cooled by heat exchange with raw water taken from a sea cock. A Keel Cooling system can also be used to cool the coolant instead.

A thermostat maintains the coolant at a proper and constant operating temperature. With thermostat control, the coolant only enter the heat exchanger when the engine reach the appropriate temperature of the engine.

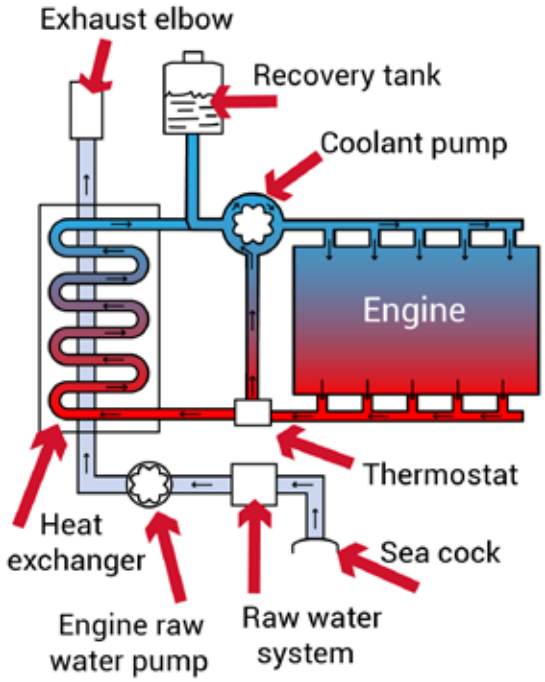

Principle of operation of water cooling with heat exchanger on an engine

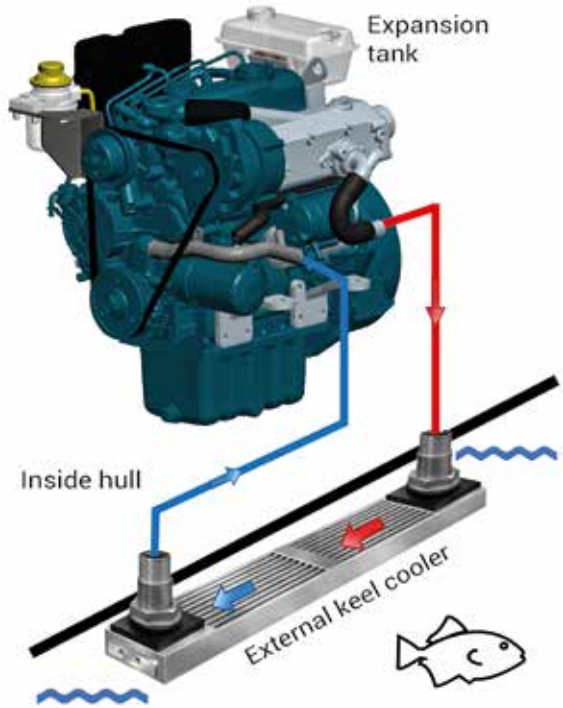

Principle of keel cooling system on engine

CAUTION !

Engines designed with an heat exchanger are not suitable for a Keel Cooling system. Operating the engine without coolant or raw water supply, even for few seconds, will lead to a complete engine breakdown.

Instead of proper mix coolant, raw clean water can only be used in case of emergency and for the shortest time possible. As soon as back to shore, get in touch with the nearest Nanni representative or seasoned marine shipyard or workshop. Please refer to the Fluids section for complete information.

- **Always use coolant made of 50% antifreeze with anticorrosion additive and 50% of clean water. The antifreeze protects the engine against internal corrosion.**
- **This mix must be used all year around, even if there is no risk of frost.**
- **Never use water alone to completely fill the coolant system. Please refer to the Fluids section for complete information.**

COOLANT

WATER & ANTI-FREEZE

Please refer to the Fluids section for complete information.

WATER BOILER

A water boiler can be connected to the engine coolant circuit. If the boiler is located above the engine, an additional recovery tank must be installed above the boiler.

Ducts to the boiler must be in accordance with high temperature and high pressure. Never attempt to use flexible hoses supplied from a hardware store.

A specific boiler kit is available from Nanni Industries. Please contact your nearest Nanni representative for more information.

The amount of coolant must be adapted depending the model of water boiler to completely fill the coolant system.

COOLANT EXPANSION

When the engine is running, the internal temperature is high ; as a result, the coolant liquid expands its volume. The heat exchanger is designed to accomodate this normal and physical expansion.

Make sure not to overfill the heat exchanger when filling with coolant.

COOLANT LEVEL

DANGER !

Never open the coolant filling cap or any plug of the cooling system when the engine is operating or still warm. Steam or hot fluid can spray out. Prevent potential injuries !

Check the coolant level before starting the engine.

1. Stop the engine and remove the key from the panel.
2. Flip up the plastic filler cap of the expansion tank.

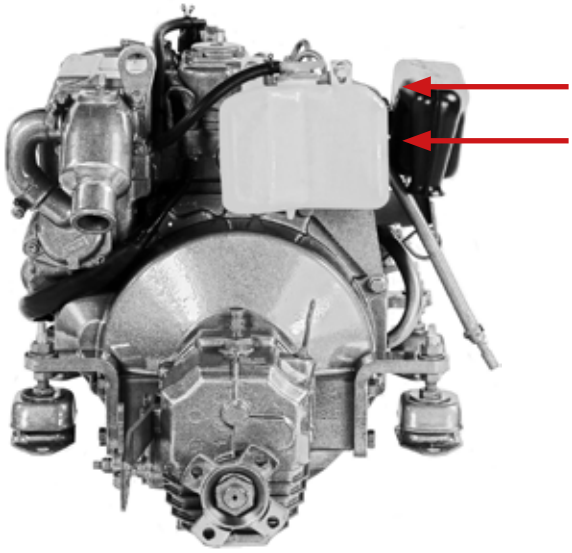

3. Coolant level should stand between the higher and the lower spurs on the side of the tank (red arrows).
4. Top-up in using clean water only if amount to fill is remote. Use glycol mix if tank is almost empty.
5. Reinstall the coolant cap.
6. Check the coolant level in the recovery tank (if fitted). It should lie between the Min and Max mark of the recovery tank. Add clean water if necessary.

NOTE !

The Min and Max level indicated on the recovery tank (if fitted) does not indicate the correct level of coolant.

DRAINING THE COOLANT CIRCUIT

1. Stop the engine and remove the key from the panel.
2. Put a container along with a hose under the drain plug **A** located at the bottom of the water cooling box to collect coolant. Remove the filler cap **B** to ease draining flow.

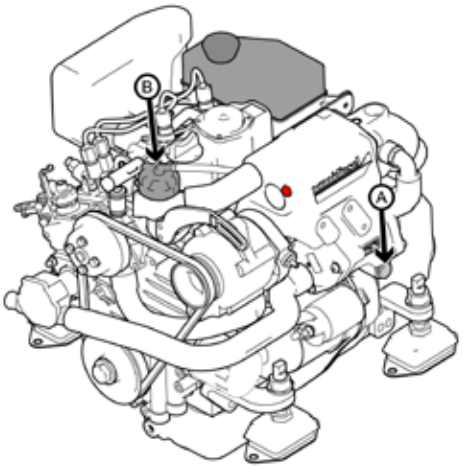

3. Drain off all coolant. Empty the recovery container as well as the hoses used in the process.
4. Insert a hose into the heat exchanger filler port. Rinse with fresh water until water which flows from the drain port is clean.
5. Reinstall the drain plug and prepare to fill with new coolant.

COOLANT - FILLING

Mix the anti-freeze with water in a clean container before filling the heat exchanger. The coolant must be totally free from dust. Fill the exchanger slowly not to introduce air into the coolant system.

Refer to the chapter ***TECHNICAL DATA*** to know the coolant capacity of the heat exchanger. For Keel Cooling system or when using a water boiler, the coolant capacity must be adapted according to the pipes length and the tank capacity.

To fill the coolant system :

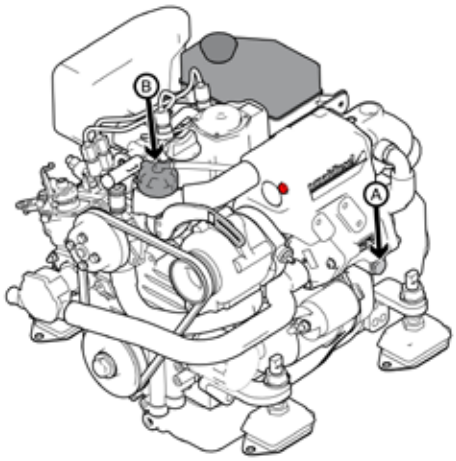

1. Check that the drain plug **A** is properly tightened.
2. Remove the vent knob (red dot).
3. Add coolant through the heat exchanger filler port **B**. Stop filling when overfilling through vent. Secure vent.
4. Check the coolant level in the expansion tank. Top up if necessary.
5. Start the engine and let it operate few minutes at idle. Stop the engine, wait few minutes and check the coolant level in the heat exchanger and in the expansion tank. Top up if necessary.

CAUTION !

If a boiler is connected to the engine, follow the filling procedure given by the manufacturer of the boiler. If the boiler is above the engine in the boat, first fill the heat exchanger, the boiler, and top up with coolant the recovery tank located above the boiler.

Make sure not to overfill the heat exchanger when filling with coolant. If too much coolant has been added, drain part of the coolant.

RAW WATER SYSTEM

DANGER !

When the boat is on the water, water can flow into the boat via components located below the waterline. Close the raw water cock (if fitted) or prevent water discharge before working on the raw water system.

NOTE !

If there's any risk of frost, raw water system should be drained.

SIPHON BREAKER

DANGER !

Close the sea cock before any operation on the siphon breaker.

NOTE !

Siphon-breaker itself is not part of maintenance shed-dule, but check regularly that the ducts are in good condition during the walk around. Please keep in mind that a siphon-breaker is compulsory if top of exhaust elbow is below the waterline.

CAUTION !

A faulty operation of the siphon breaker will lead to water entry in the engine.

Inspect it regularly and clean it following the instructions given by the manufacturer.

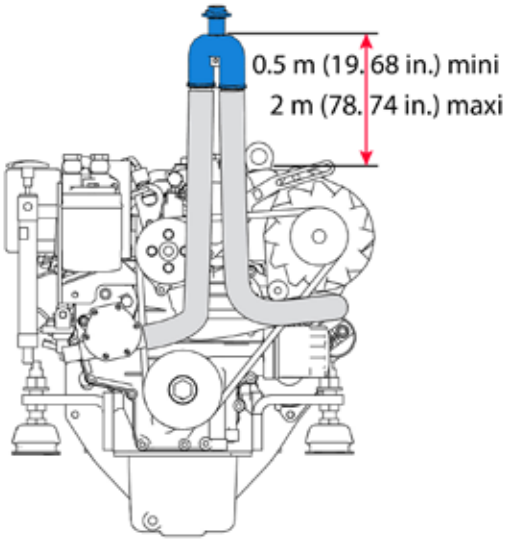

On above picture: siphon breaker in blue.

EXTRACT THE RAW WATER PUMP IMPELLER

CAUTION !

If the engine has been run without supply of raw water, check the raw water pump impeller. Change it if needed.

NOTE !

The service life of the raw water pump impeller vary depending the operating conditions.

The raw water pump impeller is an essential component of the engine. It should be changed regularly along with the seal. A worn impeller could crack and damage the cooling system. Always have a spare raw water pump impeller on board.

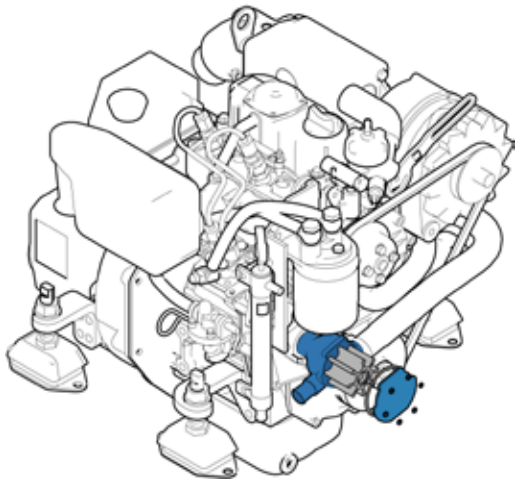

TO EXTRACT THE IMPELLER :

6. Stop the engine, remove the key from the panel and close the sea cock.
7. Remove the top cover flange of the raw water pump (6 screws).
8. Remove the gasket **A**.
9. With a permanent pen, mark the position of the neoprene impeller **B** inside the pump in order to install it in the correct position in case of reinstallation.
10. Gently pull off the impeller in using an extractor.
11. Closely inspect the impeller. Check for damaged, cracked, broken missing or flattened vanes. Change the impeller if it is damaged. Toroughly clean and drain the raw water system if parts of the impeller are missing.
12. Inspect the cover and the gasket for corrosion or damage. Change it if they are damaged.
13. Lubricate the inside of the pump and the cover with waterproof grease for rubber.
14. Install the impeller. If reinstalling the old one, place it at the same location using the mark done previously. Rotate the impeller in the same direction as the engine rotation. Lubricate the impeller with waterproof grease for rubber.
15. Install the gasket and the cover on the pump housing.
16. Open the sea cock, check for leaks. Prime the raw water system by adding water through the raw water filter if necessary.
17. Start the engine and check for leaks.

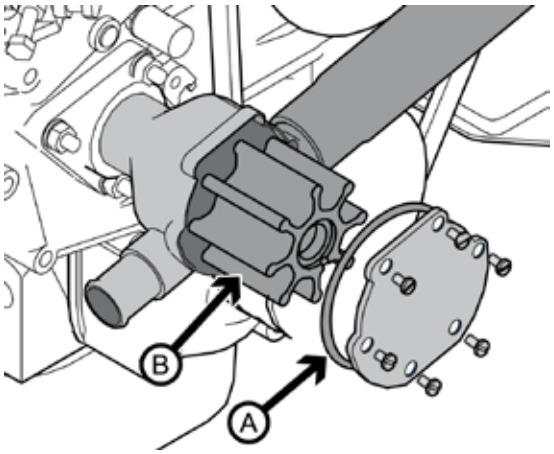

CLEANING THE RAW WATER FILTER

The model of prefilter can vary according the boat as the raw water filter is an optional extra not in the scope of supply of the engine. These instructions are given as an example only.

Check the raw water filter more regularly than indicated in the service schedule if the boat is used in water with lot of dirt and/or mud.

To clean the filter :

1. Stop the engine, remove the key from the panel and close the sea cock.
2. Check the condition of the raw water filter. If deposits have formed, unscrew the cover and remove the seal plate.
3. Remove all the contaminants. Rinse the filter and the housing with fresh water and check the condition of the seal.
4. Reinstall all the components and open the sea cock. Start the engine and check for leaks.
5. Notice: When the boat is out of water, check that the through-hull is not clogged by mud or algae.

RAW WATER SYSTEM - DRAINING

WARNING !

It is highly recommended to carry out these operations when the boat is laid up on bare ground. If the boat cannot be removed from the water, close the sea cock and prevent water entry by any means.

1. Stop the engine, remove the key from the panel and close the sea cock.
2. Remove the cover of the raw water pump.
3. Remove the cover and the seal from the raw water filter.
4. If a siphon breaker is fitted, drain it in following the manufacturer recommendations.
5. Drain the cooling system of the transmission lubrication circuit (if fitted).
6. Drain the waterlock and any other equipment connected to the raw water and exhaust system.
7. Reinstall correctly all components. Open the sea cock and check for leaks. Prime the raw water system by adding water through the raw water filter if necessary.

RAW WATER SYSTEM

RAW WATER SYSTEM CLEANING:

The raw water system must be cleaned to remove the building up of deposits and salt crystals as soon as detected or suspected.

1. Stop the engine and close the sea cock valve.
2. Disconnect the hose on the outlet side of the raw water filter.
3. Place the freed hose end in a container filled with fresh water. Ensure that the tank is large enough as the raw water pump must never run without water. Keep enough water on hand to add up constantly.

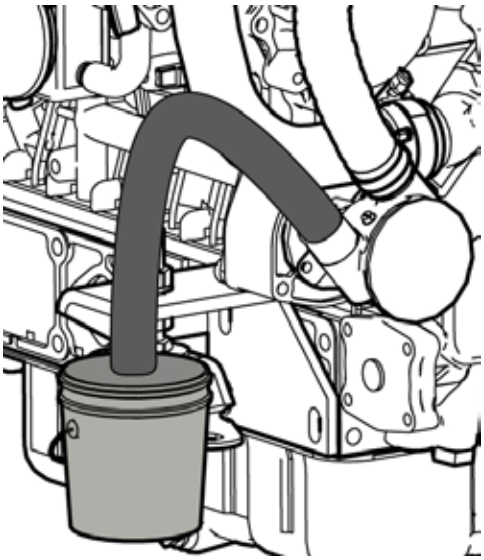

4. Check that no one is in the vincinity of the engine, the propeller and the exhaust outlet. Put the lever in neutral and start the engine.
5. Let the engine to run for a few minutes at idle. Add up fresh water in the container before container is being emptied.
6. Stop the engine.
7. At this stage, the raw circuit is alleged to be cleaned up. If deposits and salt crystals are still present, consult your Nanni representative. Do not add up cleaners additives of your own taste, as metal parts are prone to fast corrosion if harshly cleaned.
8. Clearly identify all closed valves with labels: on wheelhouse dashboard, on valves.

RISK OF ICING CONDITIONS. PROTECTION AGAINST FROST:

1. Start process after point 8 of previous paragraph is done. Empty the remaining fresh water left in the container.
2. Fill the container with engine coolant mix (50% clean water, 50% anti-freeze).
3. Start the engine and let it run at idle. Add enough coolant to fill the raw water system with coolant.
4. Stop the engine before the container is empty.
5. Reconnect the hose.
6. Clearly identify all closed valves with labels: on wheelhouse dashboard, on valves.
7. Drain the coolant mix and refill the raw water circuit when safe weather conditions are resuming.

WARNING !

Check for leaks before the next engine start

CAUTION !

When preparing the engine for long term storage, if the engine is likely to be subject to frost, drain and flush away all water remaining in the raw filter circuit.

ELECTRICAL SYSTEM

DANGER !

Stop the engine and switch off the main breaker before working on the electrical system. Isolate shore current to any accessories supplying the engine.

CAUTION !

The main breaker switch must remain ON when the engine is operating. Never disconnect the cable between the alternator and the battery when the engine is running.

WIRES AND CONNECTORS

Check that electrical wires and connectors are dry and in good condition. Replace any defective part. Do not scrape green deposits on lugs in using grit : nickel plating would be removed and bare copper would corrode even faster. Tighten time to time all terminals secured by screws. Do not forget breakers in the electrical cabinet.

BATTERY

DANGER !

Disconnect the battery cables before contemplating any kind of soldering work. Arc welding is a carrier of heavy transients currents and may affect (or destroy) many sensitive electronic components such as the E.C.U.

Read below recommendations before operating or servicing the battery.

To charge two independent batteries with a single alternator, an isolator is available as an option on most engines. Contact an authorized Nanni representative.

KEEP CLEAN THE BATTERY

the Battery(ies) should be kept clean and dry. Oxidization deposits on the battery and on terminals posts may lead to a wide variety of disturbances like : dead shorts, voltage drops, premature discharging, notably in wet or cold weather. In some occurances, these disturbances may be hard to locate. Use a brass brush to clean battery terminals posts.

DISCONNECT THE STARTER CABLES

1. Disconnect the negative cable (-) first.
2. Then remove the positive (+) cable.

If the battery is replaced, make sure that the previous one was the correct model. Check against the table below :

Engine	Nominal Capacity (K20)	Cold Test Icc
	A.h	A
N3.21-N3.30	35 (Min)-50 (Best)	350-400

CONNECT THE CABLES

1. Always connect first the positive lead (+) to the positive terminal (+) of the battery
2. And then the negative (-).

BATTERY ELECTROLYTE LEVEL

DANGER !

Never touch the battery electrolyte with bare fingers. The diluted sulphuric acid solution burns skin and will pierce clothing. Should this occur, immediately wash garnments with spring water. Obtain medical advice and assistance without delay for burns

ELECTROLYTE LEVEL CHECK

In general, detailed informations for service provided by battery manufacturers are very scarce. As a conservative rule, electrolyte level must always be above the top of the lead plates (+/-1 cm - slighlty less than half of an inch). Electrolyte is a mix of sulfuric acid and water. If level is decreasing, acid concentration is not supposed to deplete with evaporation. Water alone must be added, but it is a good practice to check also the specific gravity with a hydrometer. Follow these indications :

Unscrew completely the vent plugs and check level with a flashlight in each and every orifice.

Use a syringe filled with distilled water to top up the compartment where electrolyte level is too low.

Check gravity in each cell. A reading below 1.215 requires either charging the battery or to replace it.

If the lead plates are not sulfated and still in good condition, charging will improve specific gravity.

Specific Gravity	Charge
1.260	100%
1.230	75%
1.200	50%
1.170	25%
1.140	Very low capacity
1.110	Discharged

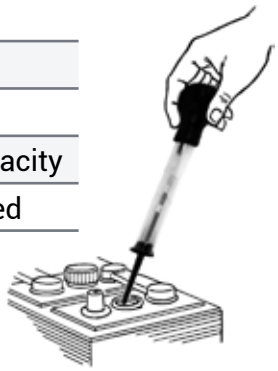

NOTE !

Never shake the battery during the process of adding electrolyte !

If the battery electrolyte level cannot be adjusted (maintenance free battery type), do not use or charge the battery if the fluid level is below the lower limit level.

If the battery has been left unattended for an extended period of time, it is likely that the battery has entered in a deep discharge process. In such a case, voltage read would be around 7 Volts or so.

ALTERNATOR BELT

The engine alternator is driven by a belt through pulleys. These components must be in good order at all times in view for the alternator to provide electricity, among others, to the engine, to the battery, to the engine control panel.

DANGER !

Stop the engine and remove the key before checking or servicing the alternator belt.

NOTE !

Always keep a spare replacement belt on-board.

IMPORTANT !

A loosen or damaged belt can result in overheats or lack of alternator charge. A too tighten belt can damage the bearings of the water pump and of the alternator.

VISUAL CHECK OF THE BELT :

If belt internal wires become visible and frayed, replace the belt. Check that belt fits properly in the pulley. Belt is constantly tensioned by an automatic belt tensioner.

CHECK THE BELT TENSION :

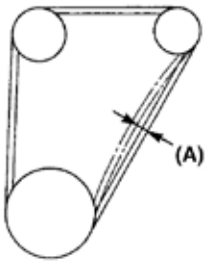

Depress the belt at point (A) and check for a deflection between 7 and 9 mm.

If not within specification, loosen the alternator (in grey on picture) and relocate it properly to adjust.

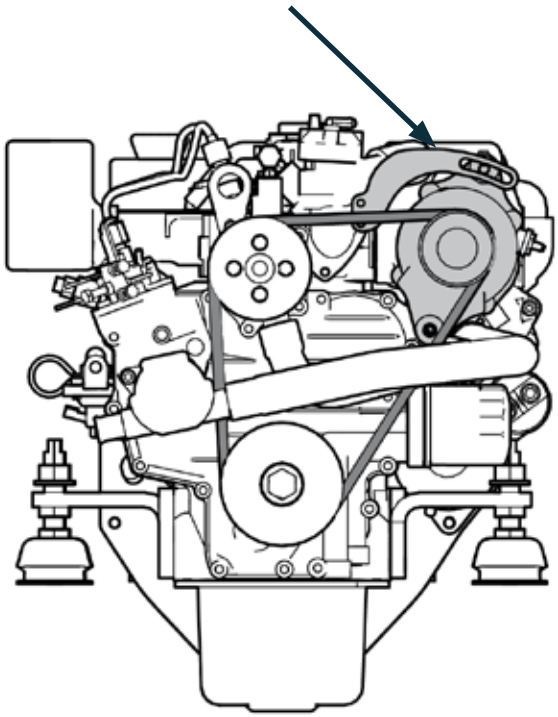

TO REPLACE THE BELT :

1. Stop the engine and remove the key from the panel.
2. Move the tensionner mechanism using a wrench and slip out the belt from the alternator pulley. Remove it completely.
3. Install the new belt. Check that the belt seats nicely between the flanges of all the pulleys.
4. Check the tension after few hours of operation.

FUSES

The engine electrical system is protected from electrical overloads by fuses. Fuses and relays are located in the electrical loom.

If the engine does not start or if the instruments panel does not operate, a fault might be somewhere in the electrical system and a fuse may have blown up.

Investigate the cause before replacing the faulty fuse straight away. Keep an assortment of spare fuses on hand. Replace a fuse with one of the same rating.

CAUTION !

If the replaced fuse blows again, the failure is larger than a simple incident. If you are still at shore, do not start the engine, and check first on your on in taking all usual precautions. If the fault is not resolved quickly, contact your nearest Nanni representative for repair.

If you are at open sea, try to locate the fault and to repair by yourself. Depending of the severity of the fault and if the event is endangering navigation, establish a radio contact to get help. Take steps as advised.

FUSES :

Item	Fuse Type		N3.21	N3.30
Glow Plugs Relay	Mini	F1	15 A	15 A
Control Panel	Mini	F2	10 A	10 A
Stop Relay	Mini	F3	15 A	15 A
Glow Plugs	ATO	F4	40 A	40 A

MINI FUSES AND ATO FUSES :

The engine fuses look like this :

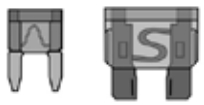

Mini ATO

LOCATION OF FUSES :

Fuses F1, F2, F3, are located in a dedicated box on the wiring harness. The box looks like this :

Fuse F4 is located in the box containing the Glow plugs and Start relays at the end of the harness :

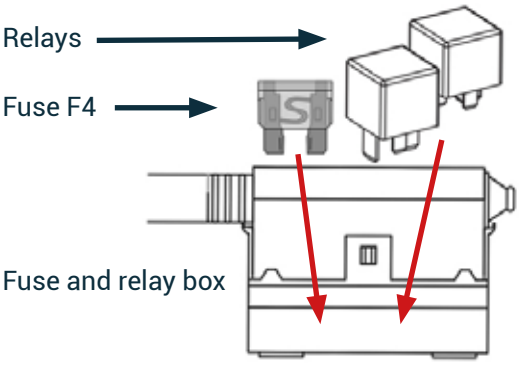

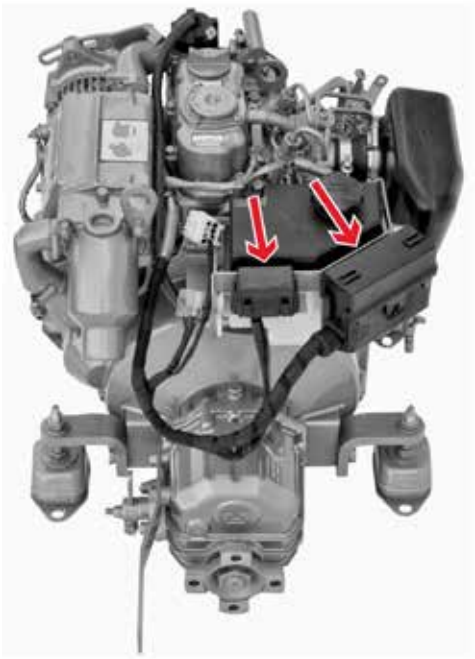

MICELLANEOUS

CAMSHAFT TIMING

From camshaft down to crankshaft, timing is ordered through a gear system and is service free.

SUMMARY

S09 STORAGE	75
SUMMARY	75
LONG TERM STORAGE	76
LONG TERM STORAGE PROCEDURE	76
RESTARTING THE ENGINE	77
BATTERY	77

LONG TERM STORAGE

A set of operations must be performed to prepare and protect the engine for a long-term storage.

See the Maintenance Section 08 - Raw water System - Risk of icing conditions / Protection against frost, to perform some of the Long Term Storage operations. We recommend that you have all these operations carried out by a Nanni authorized workshop.

NOTE !

It might be necessary to adapt these operations depending the climatic conditions. Contact a Nanni authorized workshop for further informations.

For a prolonged storage (over 12 months), a specific set of measures must be performed. All these operations should be carried out by a Nanni authorized workshop.

CAUTION !

If the engine is likely to be subject to frost, drain all water in the seawater circuit.

LONG TERM STORAGE PROCEDURE

Complete the nearest periodic maintenance inspections and operations before performing the long term storage procedure.

1. Drain and change the engine and transmission oil.
2. Change the engine oil filter.
3. Change the fuel filter and prefilter.
4. Run the engine to normal operating temperature.
5. Stop the engine and take the boat out of water.
6. Drain and clean all components of the seawater system. Protect the components against corrosion.
7. Remove the impeller from the seawater pump (if fitted). Store it in a cool and dry place. Indicate by any means that the impeller has been removed.
8. Check the engine coolant leve and condition. Top up if necessary.
9. Drain any water and contaminants from the fuel tank.
10. Fill totally the fuel tank.
11. Remove the air filter. Secure all air intake with clean clothes.
12. Clean the engine. Repair any damaged areas of paintwork with Nanni original paint.

CAUTION !

Do not point a high pressure water jet toward seals, hoses, grommets, etc.

13. Clean the hull, the hold and the drive (if fitted).
14. Check all control cables. Use grease and rust inhibitor to protect the cables.
15. Disconnect battery leads. Adjust electrolyte level if necessary. Charge the battery. Store the battery in a dry place.
16. Release tension. on belts.
17. Spray the engine with water-repellent product.
18. Remove the propeller for storage. Check the overall condition of all components of the propulsion system.

RESTARTING THE ENGINE

1. Perform external cleaning of the engine and control its condition.
2. Drain and change the engine and transmission oil.
3. Change oil filters.
4. Drain the coolant from the seawater system.
5. Check the condition of the raw water pump impeller. Change it if needed. Install the impeller.
6. Remove cloth and tape from openings. Install the air filter.
7. Close/Tighten all plugs and drain cocks.
8. Check the condition of hoses and clamps.
9. Check the engine coolant level and its condition. Top up if necessary.
10. Connect fully charged batteries.
11. Check the anodes.
12. Install the propeller.
13. Check the operation of the control cables and their condition.
14. Check belts. Adjust the tension.
15. Bleed the fuel system.

Once the boat is in the water :

16. Open the sea cock and prime the seawater system (if fitted).
17. Start the engine. Check for leaks and correct operation.

BATTERY

When storing the engine, adjust the battery electrolyte level and store it in a dry place at room temperature. Recharge the battery as often as possible to extend its service life.

Do not left the battery unattended for a long period of time: it will get into deep discharge (around 7-8 Volts). In such a situation, the battery will not recover.

S10 TROUBLESHOOTING

CAUTION !

If the engine does not function properly, use the following chart to identify the cause. If the cause of trouble can not be found, contact to Nanni authorized workshop.

NOTE !

Some components may not be part of the engine orderes. This list is not exhaustive and is only ab assistance in case of emergencies.

	PROBABLE CAUSES
The engine fails to start	1, 2, 3, 4, 5, 6, 7, 8, 9, 10, 11, 13
The engine starts but suddenly stops	1, 2, 3, 4, 5
The engine is difficult to start	1, 2, 3, 4, 5, 6, 8, 9
The starter motor is not turning or turn slowly	8, 9
The starter motor turns but the engine does not start	1, 2, 3, 4, 5, 6, 7
The engine does not reach its rated speed at wide open throttle	2, 3, 4, 5, 6, 7, 12, 14, 15, 16, 17, 26, 28
The engine operate unevenly	1, 2, 3, 4, 5, 6, 7, 14, 15, 16, 17, 18, 19, 20, 24, 28
The engine vibrates a lot	16, 27
Black exhaust smoke	4, 5, 14, 15, 16, 19, 20, 28, 29
White exhaust smoke	4, 5, 23, 25
High fuel consumption	4, 7, 14, 15, 16, 19, 20, 22, 28
The engine overheats / coolant temperature too high	14, 15, 16, 18, 19, 20, 21, 22, 28
The control lever is hard to operate	12, 14, 15, 16, 17, 26
No shift between ahead and astern	9, 11, 12, 16, 17, 26
Battery charge warning lamp comes on	8, 9, 11, 18

The numbers refer to the possible causes indicated on the following page.*
Contact a Nanni authorized workshop.

S10 TROUBLESHOOTING

1. Lack of fuel
2. Air in fuel system
3. Fuel filter fouled or clogged
4. Fuel do not meet specified standard
5. Water/contaminants in fuel
6. Valve clearance is wrong *
7. Low compression *
8. Insufficient battery charge / Defective battery
9. Faulty electrical cables contact
10. Faulty starter or starter switch *
11. Tripped fuse / Main switch is open
12. Transmission is damaged*
13. Control lever not in neutral / Stop control pulled out
14. Too much load on board
15. Fouling on underwater hull, drive or propeller
16. Defective/incorrect propeller *
17. Faulty operation of control lever / control cables
18. Loosen or damaged belt
19. Incorrect coolant / Low coolant level / Coolant leaks
20. Cooling system does not operate correctly *
21. Faulty thermostat *
22. Sea cock valve closed / Raw water filter clogged
23. Lube oil burns. Excessive oil consumption *
24. Engine oil level too low
25. Engine oil level too high
26. Transmission oil level too low
27. Defective engine mounting *
28. Insufficient air supply *
29. Clogged air filter or lack of air on admission

N3.21

FICHE TECHNIQUE *DATA SHEET*

CARACTERISTIQUES GENERALES *GENERAL DATA*

Base moteur *Engine Base*		Kubota
Configuration *Configuration*		3 cylindres en ligne *3 cylinders in line*
Type *Type*		4 temps Diesel *4 strokes Diesel*
Nombre de soupapes par cylindre *N° of vales per cylinder*		2
Taux de compression *Compression Ratio*		23.5 : 1
Admission *Air intake*		Atmosphérique *Natural*
Distribution *Valve train*		Distribution par pignons *Gear driven valve train*
Système d'injection *Fuel system*		Injection indirecte mécanique *Mechanical indirect injection*
Ordre d'allumage *Firing order*		1-2-3
Sens de rotation (vue côté volant moteur) *Rotational direction (view flywheel side)*		Anti-horaire *Anti-Clockwise*
Cylindrée *Displacement*	liltres	0.719
	in³	44
Alésage *Bore*	mm	67
	in	2.64
Course *Stroke*	mm	68
	in	2.68
Régime de ralenti *Idling speed*	tr/min *rpm*	1050
Régime nominal *Rated speed*	tr/min *rpm*	3600
Régime maxi coupure régulateur *High speed governor break point*	tr/min *rpm*	3820
Nombres d'émissions *Emission compliance*		RCD 94/25/EC
		EPA Marine Tier 3
		BSO2

SYSTEME DE LUBRIFICATION *LUBRIFICATION SYSTEM*

Pression d'huile au ralenti *Oil pressure @ idle speed*	bar	0.5
	psi	7.3

N3.21
14.4 kW [19.6 cv]

SYSTEME DE LUBRIFICATION (suite) *LUBRIFICATION SYSTEM (continued)*

Pression d'huile au régime nominal *Oil pressure @ rated speed*		bar	3.5
		psi	50.8
Capacité d'huile sans filtre, angle 0° *Oil quantity excluding filter @ 0° angle*		litres	3.3
		gal US	0.871
Angle d'installation maxi admissible *Maximum permitted installed tilt*	volant vers le bas *front down*	°	15
	volant vers le haut *front up*	°	15
Inclinaison admissible en fonctionnement intermittent *Maximum permitted intermittent*	maxi *tilt*	°	30
	latéral maxi *side tilt*	°	20

PERFORMANCE *PERFORMANCE*

Régime de rotation du vilebrequin ***RPM @ cranckshaft***	**tr/min** ***rpm***	**1000**	**1400**	**1800**	**2200**	**2600**	**3000**	**3400**	**3600**
Couple au vilbrequin *Torque @ cranckshaft*	Nm	26.3	30.6	37.3	42.2	44.1	42.8	39.9	38.2
	ft-lb	19.4	22.6	27.6	31.1	32.5	31.6	29.4	28.2
Puissance au vilebrequin *Power @ cranckshaft*	cv	3.8	6.1	9.6	13.2	16.3	18.3	19.3	19.6
	Kw	2.8	4.5	7	9.7	12	13.4	14.2	14.4
Puissance à l'hélice calculée pour charge exp.3 *Power at calculated propeller load exp.3*	cv	0.4	1.2	2.5	4.5	7.4	11.3	16.5	19.6
	Kw	0.3	0.8	1.8	3.3	5.4	8.3	12.1	14.4

SYSTEME D'INJECTION *FUEL SYSTEM*

Régime de rotation au vilebrequin ***RPM @ cranckshaft***	**tr/min** **rpm**	**1000**	**1400**	**1800**	**2200**	**2600**	**3000**	**3400**	**3600**
Consommation spécifique de carburant *Specific fuel consumption*	g/k/h	285	275	266	256	255	259	265	271
Consommation de carburant charge exp.3 *Fuel consumption propeller load exp.3*	l/h	0.1	0.2	0.6	1	1.7	2.6	3.9	4.7
	gal US/h	0	0.1	0.2	0.3	0.4	0.7	1	1.3
Consommation de carburant à pleine charge *Fuel consumption at full load*	l/h	0.9	1.5	2.2	3	3.6	4.1	4.5	4.7
	gal US/h	0.2	0.4	0.6	0.8	1	1.1	1.2	1.2
Débit volumique de carburant à pleine charge *Total volumetric fuel flow at full load*	l/h	-	-	-	-	-	-	-	-
	gal US/h	-	-	-	-	-	-	-	-
Restriction maximale d'admission de carburant *Maximum fuel inlet restriction*	kPa	6.7							
	psi	1							
Résistance maxi au passage du carburant *Maximum permitted fuel inlet pressure*	kPa	6.7							
	psi	1							
Pression maxi admissible *Maximum permitted fuel return pressure*	kPa	6.7							
	psi	1							

N3.21
14.4 kW [19.6 cv]

SYSTEME DE REFROIDISSEMENT *COOLING SYSTEM*

Débit - liquide de refroidissement *Coolant circulation pump flow*	l/min	35.5
	gal US/min	9.4
Débit - eau brute *Raw water pump flow*	l/min	20
	gal US/min	5.3
Chaleur total dégagée à puissance nominale *Total heat rejection at rated speed*	kW	16.7
	BTU/min	9.5
Capacité liquide de refroidissement *Total coolant capacity*	l	4
	gal US	1.1
Thermostat, début d'ouverture *Thermostat, start open at*	°C	71
	°F	159.8
Thermostat, ouverture complète *Thermostat, fully open at*	°C	85
	°F	185

SYSTEME D'ECHAPPEMENT *EXHAUST SYSTEM*

Débit de gaz d'échappement *Exhaust gas flow*	m³/min	3
	ft³/min	105.9
Contre-pression maxi admissible dans le circuit d'échappement *Permitted back pressure in the exhaust line*	bar	0.105
	inH²O	42.15
Température d'échappement maxi *Maximum exhaust temperature*	°C	570
	°F	10.58

SYSTEME D'ADMISSION *AIR INTAKE SYSTEM*

Consommation d'air du moteur à 25°C *Engine air consumption at 25°C*	m³/min	1.1
	ft³/min	38.8
Température d'air d'admission maxi admissible *Maximum allowance intake air temperature*	°C	50
	°F	122
Différence maxi de T° - Ambiant/air d'admission *Maximum temperature rise - ambient to engine inlet*	°C	20
	°F	68
Air d'admission - Résistance maxi admissible, filtre à air propre *Maximum air intake restriction, Clean air filter*	kPa	3.4
	inH²O	13.6
Air d'admission - Résistance maxi admissible, filtre à air sale *Maximum air intake restriction, Durty air filter*	kPa	6.8
	inH²O	27.3
Pression de suralimentation *Boost pressure*	bar	-
	psi	-

N3.21
14.4 kW [19.6 cv]

SYSTEME ELECTRIQUE *ELECTRICAL SYSTEM*

Alternateur *Alternator*	tension *voltage*	V	12
	ampère *amperes*	A	70
Démarreur électrique *Electric starter motor*		kW	1
Batterie - Courant de démarrage à froid minimum *Battery, minimum cold start current*		CCA	350 à 400 *350 to 400*
Batterie recommandée K20 *Recommanded batterie K20*		A/h	30 à 50 *30 to 50*

POIDS A SEC *DRY WEIGHT*

Poids sans transmission *Weight without transmission*	kg	97
	lbs	213.8
Poids à sec avec TMC40M *Dry weight with TMC40M*	kg	106
	lbs	233.7
Poids à sec avec SP60 *Dry weight with SP60*	kg	144
	lbs	317.5

CONSEILS D'INSTALLATION *INSTALLATION TIPS*

Diamètre tuyau alimentation carburant *Fuel line supply diameter*	mm	8
	in	0.31
Diamètre tuyau retour carburant *Fuel line return diameter*	mm	8
	in	0.31
Diamètre Tuyau eau de mer *Sea water line diameter*	mm	20
	in	0.79
Diamètre ligne d'échappement *Exhaust line diameter*	mm	40
	in	1.57

CONSEILS D'UTILISATION *RATINGS*

Classe d'application *Rating*	M5
Service *Operating hours*	Jusqu'à 1000 heures par an *Up to 1000 annual operating hours*
Facteur de charge *Load Factor*	Jusqu'à 35% *Up to 35%*
Cycle d'utilisation *Duty Cycle*	Utilisation de la puissance maximale au maximum 30 minutes heure toutes les 8 heures de fonctionnement. Le temps d'utilisation restant sans dépasser le régime de croisière. *Full power for no more than 30 minutes out of each 8 hours of operation.* *The remaining operation time must be at or below cruising speed.*

NANNI INDUSTRIES S.A.S.
11, Avenue Mariotte - Zone Industrielle
33260 La Teste - France
Tel: +33 (0)5 56 22 30 60
Fax: +33 (0)5 56 22 30 79

Spécifications selon ISO 3046. Document non contractuel. Soucieuse d'améliorer la qualité de ses produits, Nanni se réserve le droit de modifier, sans préavis, toutes caractéristiques énoncées dans ce document. Les images et schémas peuvent représenter des éléments non-standards. Toutes les combinaisons d'équipements ne sont pas disponibles.
DFRGBT02003

N3.30

FICHE TECHNIQUE *DATA SHEET*

CARACTERISTIQUES GENERALES *GENERAL DATA*

Base moteur *Engine Base*		Kubota
Configuration *Configuration*		3 cylindres en ligne *3 cylinders in line*
Type *Type*		4 temps Diesel *4 strokes Diesel*
Nombre de soupapes par cylindre *N° of vales per cylinder*		2
Taux de compression *Compression Ratio*		23.5 : 1
Admission *Air intake*		Atmosphérique *Natural*
Distribution *Valve train*		Distribution par pignons *Gear driven valve train*
Système d'injection *Fuel system*		Injection indirecte mécanique *Mechanical indirect injection*
Ordre d'allumage *Firing order*		1-2-3
Sens de rotation (vue côté volant moteur) *Rotational direction (view flywheel side)*		Anti-horaire *Anti-Clockwise*
Cylindrée *Displacement*	liltres	1.123
	in³	69
Alésage *Bore*	mm	78
	in	3.07
Course *Stroke*	mm	78.4
	in	3.09
Régime de ralenti *Idling speed*	tr/min *rpm*	930
Régime nominal *Rated speed*	tr/min *rpm*	3600
Régime maxi coupure régulateur *High speed governor break point*	tr/min *rpm*	3820
Nombres d'émissions *Emission compliance*		RCD 94/25/EC
		EPA Marine Tier 3
		BSO2

SYSTEME DE LUBRIFICATION *LUBRIFICATION SYSTEM*

Pression d'huile au ralenti *Oil pressure @ idle speed*	bar	0.5
	psi	7.3

N3.30
21.3 kW [29 cv]

SYSTEME DE LUBRIFICATION (suite) *LUBRIFICATION SYSTEM (continued)*

Pression d'huile au régime nominal *Oil pressure @ rated speed*		bar	3.5
		psi	50.8
Capacité d'huile sans filtre, angle 0° *Oil quantity excluding filter @ 0° angle*		litres	4.5
		gal US	1.19
Angle d'installation maxi admissible *Maximum permitted installed tilt*	volant vers le bas *front down*	°	15
	volant vers le haut *front up*	°	15
Inclinaison admissible en fonctionnement intermittent *Maximum permitted intermittent*	maxi *tilt*	°	30
	latéral maxi *side tilt*	°	20

PERFORMANCE *PERFORMANCE*

Régime de rotation du vilebrequin ***RPM @ cranckshaft***	**tr/min** ***rpm***	**1000**	**1400**	**1800**	**2200**	**2600**	**3000**	**3400**	**3600**
Couple au vilbrequin *Torque @ cranckshaft*	Nm	50	56	60	63	64	62.7	58.4	56.5
	ft-lb	36.9	41.3	44.3	46.5	47.2	46.3	43.1	41.7
Puissance au vilebrequin *Power @ cranckshaft*	cv	7.1	11.2	15.4	19.7	23.7	26.8	28.3	29
	Kw	5.2	8.2	11.3	14.5	17.4	19.7	20.8	21.3
Puissance à l'hélice calculée pour charge exp.3 *Power at calculated propeller load exp.3*	cv	0.6	1.7	3.6	6.6	10.9	16.8	24.4	29
	Kw	0.5	1.3	2.7	4.9	8	12.3	17.9	21.3

SYSTEME D'INJECTION *FUEL SYSTEM*

Régime de rotation au vilebrequin ***RPM @ cranckshaft***	**tr/min** **rpm**	**1000**	**1400**	**1800**	**2200**	**2600**	**3000**	**3400**	**3600**
Consommation spécifique de carburant *Specific fuel consumption*	g/k/h	279	264	249	241	245	259	279	289
Consommation de carburant charge exp.3 *Fuel consumption propeller load exp.3*	l/h	0.1	0.4	0.8	1.4	2.4	3.9	6	7.4
	gal US/h	0	0.1	0.2	0.4	0.6	1	1.6	2
Consommation de carburant à pleine charge *Fuel consumption at full load*	l/h	1.8	2.6	3.4	4.2	5.2	6.2	7	7.4
	gal US/h	0.5	0.7	0.9	1.1	1.4	1.6	1.9	2
Débit volumique de carburant à pleine charge *Total volumetric fuel flow at full load*	l/h	-	-	-	-	-	-	-	-
	gal US/h	-	-	-	-	-	-	-	-
Restriction maximale d'admission de carburant *Maximum fuel inlet restriction*	kPa	6.7							
	psi	1							
Résistance maxi au passage du carburant *Maximum permitted fuel inlet pressure*	kPa	6.7							
	psi	1							
Pression maxi admissible *Maximum permitted fuel return pressure*	kPa	6.7							
	psi	1							

N3.30
21.3 kW [29 cv]

SYSTEME DE REFROIDISSEMENT *COOLING SYSTEM*

Débit - liquide de refroidissement *Coolant circulation pump flow*	l/min	60
	gal US/min	15.8
Débit - eau brute *Raw water pump flow*	l/min	38
	gal US/min	10
Chaleur total dégagée à puissance nominale *Total heat rejection at rated speed*	kW	27.9
	BTU/min	1.9
Capacité liquide de refroidissement *Total coolant capacity*	l	4
	gal US	1.1
Thermostat, début d'ouverture *Thermostat, start open at*	°C	71
	°F	159.8
Thermostat, ouverture complète *Thermostat, fully open at*	°C	85
	°F	185

SYSTEME D'ECHAPPEMENT *EXHAUST SYSTEM*

Débit de gaz d'échappement *Exhaust gas flow*	m³/min	4.6
	ft³/min	162.4
Contre-pression maxi admissible dans le circuit d'échappement *Permitted back pressure in the exhaust line*	bar	0.105
	inH²O	42.15
Température d'échappement maxi *Maximum exhaust temperature*	°C	550
	°F	1022

SYSTEME D'ADMISSION *AIR INTAKE SYSTEM*

Consommation d'air du moteur à 25°C *Engine air consumption at 25°C*	m³/min	1.1
	ft³/min	38.8
Température d'air d'admission maxi admissible *Maximum allowance intake air temperature*	°C	50
	°F	122
Différence maxi de T° - Ambiant/air d'admission *Maximum temperature rise - ambient to engine inlet*	°C	20
	°F	68
Air d'admission - Résistance maxi admissible, filtre à air propre *Maximum air intake restriction, Clean air filter*	kPa	3.4
	inH²O	13.6
Air d'admission - Résistance maxi admissible, filtre à air sale *Maximum air intake restriction, Durty air filter*	kPa	6.8
	inH²O	27.3
Pression de suralimentation *Boost pressure*	bar	-
	psi	-

N3.30

21.3 kW [29 cv]

SYSTEME ELECTRIQUE *ELECTRICAL SYSTEM*

Alternateur *Alternator*	tension *voltage*	V	12
	ampère *amperes*	A	120
Démarreur électrique *Electric starter motor*		kW	1.4
Batterie - Courant de démarrage à froid minimum *Battery, minimum cold start current*		CCA	450 à 500 *450 to 500*
Batterie recommandée K20 *Recommanded batterie K20*		A/h	65 à 75 *65 to 75*

POIDS A SEC *DRY WEIGHT*

Poids sans transmission *Weight without transmission*	kg	136
	lbs	299.8
Poids à sec avec TMC40M *Dry weight with TMC40M*	kg	145
	lbs	319.7
Poids à sec avec SP60 *Dry weight with SP60*	kg	183
	lbs	403.4

CONSEILS D'INSTALLATION *INSTALLATION TIPS*

Diamètre tuyau alimentation carburant *Fuel line supply diameter*	mm	8
	in	0.31
Diamètre tuyau retour carburant *Fuel line return diameter*	mm	8
	in	0.31
Diamètre Tuyau eau de mer *Sea water line diameter*	mm	25
	in	1
Diamètre ligne d'échappement *Exhaust line diameter*	mm	50
	in	2

CONSEILS D'UTILISATION *RATINGS*

Classe d'application *Rating*	M5
Service *Operating hours*	Jusqu'à 1000 heures par an *Up to 1000 annual operating hours*
Facteur de charge *Load Factor*	Jusqu'à 35% *Up to 35%*
Cycle d'utilisation *Duty Cycle*	Utilisation de la puissance maximale au maximum 30 minutes heure toutes les 8 heures de fonctionnement. Le temps d'utilisation restant sans dépasser le régime de croisière. *Full power for no more than 30 minutes out of each 8 hours of operation.* *The remaining operation time must be at or below cruising speed.*

NANNI INDUSTRIES S.A.S.
11, Avenue Mariotte - Zone Industrielle
33260 La Teste - France
Tel: +33 (0)5 56 22 30 60
Fax: +33 (0)5 56 22 30 79

Spécifications selon ISO 3046. Document non contractuel. Soucieuse d'améliorer la qualité de ses produits, Nanni se réserve le droit de modifier, sans préavis, toutes caractéristiques énoncées dans ce document. Les images et schémas peuvent représenter des éléments non-standards. Toutes les combinaisons d'équipements ne sont pas disponibles.

DFRGBT02004

EMISSION CONTROL SYSTEM EPA WARRANTY USA ONLY

This Emission Control System Warranty Statement applies solely to engines certified to United States of America EPA 40 CFR 1042 and sold through Nanni Industries S.A.S - France network (named the "Company") that are installed in vessels flagged or registered in the United States of America and associated waters (ie., Pacific & Carribean).

SCOPE OF GLOBAL WARRANTY

Nanni Industries S.A.S warrants to the first owner and subsequent purchaser of a new diesel engine sold by the Company, the following:

That the engine has been assembled, equipped and tested to be in conformity at the time of sale with the relevant regulations in force of the U.S Environmental Protection Agency and of the California Air Ressources Board.

That the engine is defect free both in material and workmanship causing the engine to fail to conform with the above mentioned regulation for a warranty period in years and hours of engine operations listed herewith in this document, and whichever would occur first.

EPA WARRANTY

EPA and CARB warranties only apply to new engines having the certification label affixed to the engine and sold as stated above in the geographic areas.

When applied onto engine, Emission Control label must never be removed from engine block neither covered with a layer of paint. This label is the evidence showing that the engine is meeting U.S Emissions Regulations. It must be kept available at anytime once the vessel has entered waters being in the scope of the North American Emission Control Area (ECA).

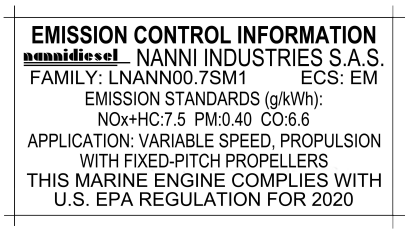

Above picture: Example of EPA Label.

WARRANTY COVERAGE

Repair or replacement of warranted parts will be performed by an authorized Nanni distributor/representative. This limited emission system warranty covers engine components that are part of the emission control system of the engine as delivered by the Company to the purchaser. Such components include the following:

- Injection pumps
- Injectors
- Air intake manifold
- Turbocharger
- Intercooler

WARRANTY PERIOD

The warranty period starts on either the date of:

- Delivery to the first-end user,
- Date the unit is first leased, rented or loaned,
- Date of commissioning by shipyard,

Whichever applies by mutual agreement between involved parties for the engines listed below:

Engine	Warranty Period
N2.14 N3.21	Two and half (2,5) years or 1 500 hours
N3.30 N4.38 N4.40 N4.50	Three and half (3,5) years or 2 500 hours
N4.65 N4.80 N4.115 N4.140	Five (5) years or 5 000 hours

WARRANTY LIMITATIONS

As far as Nanni Industries S.A.S engines are EPA certified, it means that the Company guarantees that all engines of the same type that are manufactured are approved and certified by the authorities in accordance with different exhaust emissions standards.

However, for the engine to be in accordance with this standards, specific requirements for maintenance and service are to be followed:

- Only Nanni replacement parts must be used.
- Maintenance intervals must be observed.
- The engine must not be modified in any way except with accessories and service kits approved by Nanni Industries S.A.S. France.
- Service of the fuel system must always be carried out by an authorized Nanni workshop.
- No modifications to the air intake and exhaust system may be undertaken.
- Seals may only be undone by authorized personnel.
- The operation instructions stated in the relevant manuals must be follow by the user.

Nanni's responsibility for the engine specification being in accordance with the certification will be void if one or several of above conditions are not followed.

ENGINE RESPONSABILITY

Nanni engines are assembled and tested in view to have minimum environmental impact as possible. This objective, however, can only be achieved with full cooperation of the end user.

Operating and maintenance instructions issued in the Company User Manuals are providing the best help for the user to protect their engine(s) and to adopt environmentally responsible behaviour.

Nanni engine(s) users must ensure that they only use recommended fuels and oils. Using another type of fuel or oil could cause major malfunctions, an higher fuel consumption, a reduced engine service life, and a greater discharge of exhaust gases.

When draining the oil and changing the oil or fuel filter, dispose of the waste in an appropriate container. These fluids cause major damage to flora and fauna if discharged into nature. Use an absorption kit in the event of accidental discharge of oil or fuel into the water.

CUSTOMER ASSISTANCE

Should you have any question regarding the Emission Control System, your authorized Nanni dealer will be glad to inform you and to guide you for the correct care and operating procedures to follow on your engine. Should you be in need of additional assistance, please contact:

NANNI INDUSTRIES S.A.S.
11, Avenue Mariotte
Zone Industrielle
33260-La Teste
France
Phone: +33 (0)5 56 22 30 60
Fax: +33 (0)5 56 22 30 79
Web: www.nannienergy.com

ENERGY IN BLUE

NANNI INDUSTRIES S.A.S.
11, Avenue Mariotte
33260 La Teste France
Tel: +33 (0)5 56 22 30 60
Fax: +33 (0)5 56 22 30 79
www.nannienergy.com