NANNI MARINE ENGINE

OPERATOR MANUAL

DGBXXT09018

ENGINE

N13.700 CR3 HD

N13.700 CR3

N13.750 CR3

N13.800 CR3

N13.930 CR3

nanni

ENERGY IN BLUE

TRACKED CHANGES

CODE	INDEX	DATE	INITIALS	NATURE OF TRANSLATIONS	PAGES
DGBXXT09018	-	03/2020	MC	Create	-

Please note all changes and pages associated.
For further clarity, please add a line in front of each change.

S00 SUMMARY

Q00 TRACKED CHANGES 3
TRACKED CHANGES 3
S00 SUMMARY 5
S01 INTRODUCTION 7
INTRODUCTION 7
ABOUT THIS MANUAL 8
CONTENT & UPDATES 8
S02 SAFETY 9
SUMMARY 9
SAFETY SIGNALS 10
SAFETY INFORMATION 10
REPLACEMENT OF MISSING OR DAMAGED SAFETY SIGNS 10
READ SAFETY INSTRUCTIONS 10
ENGINE-GENSET SAFETY ICONS 11
SAFETY PRECAUTIONS 12
HOT EXHAUST PRECAUTIONS 12
WORK IN VENTILATED AREA 12
WASTE DISPOSAL 12
UNWANTED ENGINE START 12
SAFE MAINTENANCE PRACTICE 12
WORK IN CLEAN AREA 12
PROTECTIVE CLOTHING 12
SERVICE ENGINES SAFELY 13
PROPER USE OF TOOLS 13
SUPPORT ENGINES PROPERLY 13
SAFE ILLUMINATED WORK AREA 13
PROPER LIFTING EQUIPMENT 13
NOISE PROTECTION 13
GENSET OUTPUT GENERATED POWER 13
GUARDS REQUIREMENTS 13
STAYING CLEAR OF ROTATING DRIVELINES 14
PAINT REMOVAL BEFORE HEATING 14
HIGH-PRESSURE FUEL SYSTEM OPENING RISK 14
AVOID HIGH-PRESSURE FLUIDS 14
SAFE COOLING SYSTEM SERVICE 14
AVOID HEAT NEAR PRESSURIZED FLUID LINES 14
WELDING NEAR ELECTRONIC CONTROL UNIT (ECU) 15
STATIC ELECTRICITY RISK 15
HANDLE FUEL SAFELY - AVOID FIRES 15
BE PREPARED FOR EMERGENCIES 15
HANDLE STARTING FLUID SAFELY (ETHER) 15
HANDLING BATTERIES SAFELY 15
PREVENT BATTERY EXPLOSIONS 16
FROST PROTECTION-WINTERIZATION 16
LIVE WITH SAFETY 16
PREVENT ACCIDENTS 16
S03 FLUIDS 17
SUMMARY 17
FUELS 18
DIESEL FUEL 18
SULPHUR CONTENT 18
WINTER DIESEL 18
WATER IN FUEL 18
MICROORGANISMS IN FUEL 18
INERT IMPURITIES IN FUEL 19
DIESEL LUBRICANTS 19
PRECAUTIONS TO UNDERTAKE 19
OILS RECOMMENDED OR AUTHORIZED 19
GENERALITIES 19
OILS VISCOSITY 20
CORRESPONDENCE BETWEEN API AND ACEA OILS 20
DIESEL SULPHUR CONTENT 20
COOLANTS 21
COOLANT DRAIN INTERVALS 21
WATER PROPERTIES 21
WATER PROPERTIES TO MIX WITH COOLANT CONCENTRATE 21
OTHER COOLANTS 22
FREEZE PROTECTION 22
REQUIRED QUANTITY OF COOLANT VS COOLING SYSTEM CAPACITY 22
OPERATING ENGINE IN WARM TEMPERATURE CLIMATES 22
DISPOSING OF WASTE FLUIDS 23
ANNEX 24
ANNEX 1. VOLUME OF GLYCOL 24
S04 ENGINE WARRANTY 25
ENGINE IDENTIFICATION 25
ORIGINAL SUPPLIER ENGINE PLATE 25
ENGINE HOMOLOGATION 26
ENGINE RESPONSABILITY 26
WARRANTY 26
PROPOSITION 65 STATE OF CALIFORNIA 27
EPA WARRANTY 27
S05 INSTRUMENTATION 28
SUMMARY 28
INTRODUCTION 29
PRODUCT IDENTIFICATION 29
FRONT SIDE 29
PRESENTATION 29
START BUTTON 29
NAVIGATION SCROLL BUTTON (HIDE) 29
NAVIGATION SCROLL BUTTON 29
STOP BUTTON (MUTE) 29
ELECTRICAL CONNECTIONS 31
DISPLAYED DATA 32
SAFEGUARD FUNCTION 32
FAULT CODES 33
SYSTEM LAYOUT INCLUDING OPTIONS 40
S06 COMPONENTS 41
SUMMARY 41
ENGINE MAIN COMPONENTS 42
ENGINE VIEWS N13 CR3 43
S07 STARTING & RUNNING 45
SUMMARY 45

S00 SUMMARY

BEFORE STARTING 46
FUEL SYSTEM 46
RAW WATER SYSTEM 46
NEUTRAL SAFEGUARD 46
CHECKS BEFORE STARTING 47
STARTING THE ENGINE 47
COLD WEATHER OPERATION 47
ENGINE START 48
IGNITION AND CRANKING 48
ENGINE STARTED 48
STARTING WITH BOOSTER BATTERIES 48
ENGINE RELUCTANT TO START 49
IDLING ENGINE 49
NORMAL ENGINE OPERATION 49
BREAK IN 50
POWER TAKE OFF 50
REMOTE CONTROL 50
RUNNING 51
BEHAVIOUR OF THE BOAT 51
DURING OPERATION 51
CRUISING SPEED 51
MANOEUVRING 52
TROLLING VALVE 52
AFTER RUNNING 53
STOPPING THE ENGINE 53
AFTER STOPPING THE ENGINE 53
ANCHORING 54
COLD WEATHER PRECAUTIONS 54
S08 MAINTENANCE 55
SUMMARY 55
ABOUT 56
MAINTENANCE 57
TURBOCHARGER 59
TURBO SERVICE 59
CLEANING THE ENGINE 60
EXAUST SYSTEM 60
AIR INTAKE 61
AIR CLEANER 61
READING VACUUM INDICATOR 61
REPLACE THE AIR CLEANER FILTER 62
AND SAFETY CARTRIDGE 62
RENEWING AN AIR FILTER WITH A 62
NON-RENEWABLE ELEMENT 62
FUEL SYSTEM 63
CLEANLINESS REQUIREMENTS 63
DRAINING AND RENEWING AN ENGINE- 65
MOUNTED WATER SEPARATING PREFILTER 65
RENEWING THE COMMUTATIVE WATER SEPARAT-
ING PREFILTER (OPTION) 68
BLEEDING THE FUEL SYSTEM 69
LUBRICATION SYSTEM 71
OIL LEVEL - ADDING ENGINE OIL 71
CHANGING THE OIL 72
CLEANING CENTRIFUGAL OIL CLEANER 73
OPERATIONAL TESTING OF THE 75
CENTRIFUGAL OIL CLEANER 75
REPLACE THE OIL FILTER 76
COOLING SYSTEM 76
COOLANT 77
CHECKING COOLANT LEVEL 77
CHECKING COOLANT ANTIFREEZE AND CORROSION
PROTECTION 77
CHECKING SACRIFICIAL ANODES 78
CHECKING SEA WATER PUMP IMPELLER 79
CHANGING THE COOLANT AND CLEANING THE
COOLING SYSTEM 80
ELECTRICAL SYSTEM 87
WIRES AND CONNECTORS 87
ENGINE COMMAND CONNECTORS 87
BATTERY 88
KEEP CLEAN THE BATTERY 88
DISCONNECT THE STARTER CABLES 88
CONNECT THE CABLES 88
BATTERY ELECTROLYTE LEVEL 88
MISCELLANEOUS 91
CHECKING THE DRIVE BELT 91
CHECKING FOR LEAKS 92
CHECKING AND ADJUSTING THE VALVE CLEARANCE
92
S09 STORAGE 95
LONG TERM STORAGE 96
LONG TERM STORAGE PROCEDURE 96
RESTARTING THE ENGINE 97
BATTERY 97
S10 TROUBLESHOOTING 98

SPECIFICATIONS 100

INTRODUCTION

Before operating the engine, make sure that this Manual is applicable to the engine type. Refer to the identification plate if you are not sure about the engine model designation. If you don't have the correct manual, please contact your Nanni authorized dealer.

All the information and specifications in this manual are based on the technical data available at time of publication. Changes and updates may be made by Nanni without notice.

Illustrations are intended as a general guide and may vary from the equipment fitted in the engine in some details.

If there are any equipment details that are not shown or described in this Manual, or if you have any question regarding the operation of any equipment, your authorized Nanni dealer will be glad to inform you of correct care and operating procedures. Contact a NANNI INDUSTRIES S.A.S. authorized dealer for the servicing of your engine. A list of dealers is available on our website :

www.nannienergy.com

Read this Manual carefully to learn how to operate and service your engine correctly. Failure to do so could result in personal injury or equipment damage. This Manual should be considered as a permanent part of the engine and should remain with it, even when sold.

Right-hand and left-hand sides are determined by standing at the drive or flywheel end (rear) of the engine and facing toward the front of the engine.

Write engine serial numbers and option codes (if any) in the spaces indicated in the Record Keeping Section (02). Accurately record all numbers. Your Nanni Agent also needs these numbers when you order parts. File the identification numbers in a secure place. Some engine accessories such as air cleaner, and instruments are optional. These accessories may be provided by a third party. This Manual applies only to the engine and those options available through the Nanni distribution network.

ABOUT THIS MANUAL

This Manual contains important information, tips, suggestions and warnings. We urge you to read it carefully and familiarize yourself with the engine before starting.

For your own safety and longer service life of the engine, follow the instructions and warnings contained in this manual and in all documentation provided with the boat. Ignoring them could result in damage to the engine or personal injury to you or others.

Please ensure that this Manual is always kept in the boat. It should always be available to anyone else using the engine, i.e. anyone renting, borrowing or buying the engine from you.

CONTENT & UPDATES

All the informations and specifications in this Manual are based on the technical data applicable at the time of its publication. Changes and updates may be made by Nanni without notice.

Illustrations are intended as a general guide, and may vary from the equipment fitted in the engine in some details. Some sections of the Manual do not apply to all engines. If this is the case, a text indicates which engines it applies to.
If there are any equipment details that are not shown or described in this Operator's Manual, or if you have any questions about the operation of any equipment, your authorized Nanni Dealer will be glad to inform you of correct care and operating procedures.

SUMMARY

S02 SAFETY 9
SUMMARY 9
SAFETY SIGNALS 10
SAFETY INFORMATION 10
REPLACEMENT OF MISSING OR DAMAGED SAFETY SIGNS 10
READ SAFETY INSTRUCTIONS 10
ENGINE-GENSET SAFETY ICONS 11
SAFETY PRECAUTIONS 12
HOT EXHAUST PRECAUTIONS 12
WORK IN VENTILATED AREA 12
WASTE DISPOSAL 12
UNWANTED ENGINE START 12
SAFE MAINTENANCE PRACTICE 12
WORK IN CLEAN AREA 12
PROTECTIVE CLOTHING 12
SERVICE ENGINES SAFELY 13
PROPER USE OF TOOLS 13
SUPPORT ENGINES PROPERLY 13
SAFE ILLUMINATED WORK AREA 13
PROPER LIFTING EQUIPMENT 13
NOISE PROTECTION 13
GENSET OUTPUT GENERATED POWER 13
GUARDS REQUIREMENTS 13
STAYING CLEAR OF ROTATING DRIVELINES 14
PAINT REMOVAL BEFORE HEATING 14
HIGH-PRESSURE FUEL SYSTEM OPENING RISK 14
AVOID HIGH-PRESSURE FLUIDS 14
SAFE COOLING SYSTEM SERVICE 14
AVOID HEAT NEAR PRESSURIZED FLUID LINES 14
WELDING NEAR ELECTRONIC CONTROL UNIT (ECU) 15
STATIC ELECTRICITY RISK 15
HANDLE FUEL SAFELY - AVOID FIRES 15
BE PREPARED FOR EMERGENCIES 15
HANDLE STARTING FLUID SAFELY (ETHER) 15
HANDLING BATTERIES SAFELY 15
PREVENT BATTERY EXPLOSIONS 16
FROST PROTECTION-WINTERIZATION 16
LIVE WITH SAFETY 16
PREVENT ACCIDENTS 16

SAFETY SIGNALS

A signal word—**DANGER**, **WARNING**, or **CAUTION**—is used in conjunction with the safety-alert symbol.

DANGER identifies the most serious hazard with lethal possible consequences.

WARNING identifies serious hazard with possible large injury consequences.

CAUTION identifies precautions to undertake which if not followed could lead to the above mentioned safety warnings. Damage to equipement could happen.

NOTICE is used for specific attention to sensitive actions on equipment. Other signals still applying.

IMPORTANT is a signal with a meaning of care to apply to equipment.

SAFETY INFORMATION

This symbol on the engine or in this manual is an alert to the potential for personal injury. Follow recommended precautions and safe operating practices.

REPLACEMENT OF MISSING OR DAMAGED SAFETY SIGNS

Replace missing or damaged safety signs. There can be additional safety information contained on parts and components sourced from suppliers that is not reproduced in this Operator Manual.

READ SAFETY INSTRUCTIONS

Carefully read all safety messages in this manual and on your genset safety signs.

Keep safety signs in good condition. Be sure new equipment components and repair parts include the current safety signs.

Replacement safety signs are available from your dealer. There can be additional safety information contained on parts and components sourced from suppliers that is not reproduced in this Operator Manual.

Keep your equipment in proper working condition.

DANGER !

WARNING !

CAUTION !

NOTE !

IMPORTANT !

Please keep in mind that above safety labels have no degree of danger. Any irresponsible action could lead to a real danger situation.

Learn how to operate the equipment and how to use controls properly. Do not let anyone operate it without instruction.

Unauthorized modifications to the equipment may impair the function and/or safety and affect its life span.

If you do not understand any part of this document and need assistance, contact your Nanni representative.

ENGINE-GENSET SAFETY ICONS

Some stickers are fixed directly on the engine. They are intended to help you to quickly identify the location of certain components and avoid possible hazards when working on the engine.

Ensure that these stickers are always visible and replace them if torn or washed up.

Refers to important informations and instructions to follow before handling the engine.

Indicates possible electrical hazards.

Indicates hot parts entailing substantial risks of burns.

Indicates an area containing pressurised fluids.

Indicates hazardous rotating parts.

Stipulates that no flames or sparks should be created in the vicinity.

Indicates where to check the coolant level.

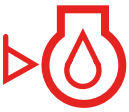

Indicates where to check the engine oil level.

Indicates the coolant drain orifice.

Indicates the oil drain orifice.

SAFETY PRECAUTIONS

HOT EXHAUST PRECAUTIONS

Servicing machine or attachments with engine running can result in serious personal injury. Avoid exposure and skin contact with hot exhaust gases and components.

Exhaust parts and streams become very hot during operation. Exhaust gases and components reach temperatures hot enough to burn people, ignite, or melt common materials.

WORK IN VENTILATED AREA

Engine exhaust fumes can cause sickness or death. If it is necessary to run an engine in an enclosed area, remove the exhaust fumes from the area with an exhaust pipe extension.

If you do not have an exhaust pipe extension, open the doors and get outside air into the area.

WASTE DISPOSAL

Improperly disposing of waste can threaten the environment and ecology. Potentially harmful waste used in engines include such items as oil, fuel, coolant, fluids filters and batteries.

Use leakproof containers when draining fluids ; Do not pour waste into the sea, ground, down a drain, or into any other water source.

Contact your local environmental or recycling center, or your dealer for information on the proper way to recycle or dispose of waste.

UNWANTED ENGINE START

Avoid possible injury or death from engine runaway. Do not start engine by shorting across the starter motor solenoid terminals posts. Engine will start if normal circuitry is bypassed. Start engine from operator's seat.

SAFE MAINTENANCE PRACTICE

Understand service procedures before doing work. Keep work area clean and dry. Never lubricate, service, or adjust engine while it is running. Keep hands, feet, hair and clothing away from moving parts.

Fix damage immediately. Replace worn or broken parts. Remove any build up of grease, oil, or debris. On self-propelled equipment, disconnect battery ground (-) before making adjustments on electrical systems or welding.

WORK IN CLEAN AREA

Clean work area and machine before starting a job. Make sure you have all necessary tools to do your job. Have the right parts on hand. Read all instructions thoroughly ; do not attempt shortcuts.

PROTECTIVE CLOTHING

Wear close fitting clothing and safety equipment appropriate to the job. Operating equipment safely requires the full attention of the operator. Do not wear radio or music headphones while operating the engine.

SERVICE ENGINES SAFELY

Tie long hair behind your head. Do not wear a necktie, scarf, loose clothing, or necklace when you work near moving parts. If these items were to get caught, severe injury could result. Remove rings and other jewelry to prevent electrical shorts and entanglement in moving parts.

PROPER USE OF TOOLS

Use tools appropriate to the work. Makeshift tools and unfollowed procedures can create safety hazards. Do not use U.S mechanical tools on metric fasteners (i.e. a 1/2 inch wrench on a 13 mm nut).

Use power tools only to loosen threaded parts and fasteners. For loosening and tightening hardware, use the correct size tools. Avoid bodily injury caused by slipping wrenches. Use only service parts meeting manufacturer specifications.

SUPPORT ENGINES PROPERLY

Always lower the attachment or implement to the base before you work on an engine. If the work requires that the engine be lifted, provide secure system. If left in a raised position, hydraulically supported device can settle or leak down. Do not support engines on any kind of props that may crumble. Do not work under an engine that is solely supported by a jack. Follow recommended procedures in this manual.

SAFE ILLUMINATED WORK AREA

Illuminate your work area adequately and safely. Use a portable safety light for working inside the engine room. Make sure the bulb is enclosed by a wire cage. The hot filament of an accidentally broken bulb can ignite spilled fuel or oil.

PROPER LIFTING EQUIPMENT

Lifting heavy components incorrectly can cause severe injury or equipment damage. Use expertise of staff holding relevant(s) legal capacity to operate heavy lifting equipment, with the know-how of using slings and chains.

NOISE PROTECTION

Prolonged exposure to loud noise can cause impairment or loss of hearing. Wear a suitable hearing protective device such as earmuffs or earplugs to protect against objectionnable or uncomfortable loud noises.

GENSET OUTPUT GENERATED POWER

Genset will deliver a sizeable amount of electrical power which can be lethal if not handled properly. Thus, any service, connection or repair on the alternator can only done by a certified marine electrician.

GUARDS REQUIREMENTS

Rotating cooling system fans, belts, pulleys, and drives can cause serious injury. Keep all guards in place at all times during the engine operation. Wear close-fitting clothes. Stop the engine and be sure that fans, belts, pulleys, and drives are stopped before making adjustments, connections, or cleaning near fans and their drive components.

STAYING CLEAR OF ROTATING DRIVELINES

Entanglement in rotating driveline can cause serious injury or death. Keep all shields in place at all times. Make sure rotating shields turn freely.

Wear close-fitting clothing. Stop the engine and be sure that all rotating parts and drivelines are stopped before making adjustments, connections, or performing any type of service on engine or driven equipment.

PAINT REMOVAL BEFORE HEATING

Avoid potentially toxic fumes and dust. Hazardous fumes can be generated when paint is heated by welding, soldering, or in using a torch.

Paint removal :

- Remove paint a minimum of 100 mm (4 in.) from area to be affected by heating. If paint cannot be removed, wear an approved respirator mask before heating or welding.
- If you sand or grind paint, avoid breathing the dust. Wear an approved respirator.
- If you use solvent or paint stripper, remove stripper with soap and water before welding. Remove solvent or paint stripper containers and other flammable material from area.
- Allow fumes to disperse at least 15 minutes before welding or heating.
- Do not use a chlorinated solvent in areas where welding will take place.
- Do all work in an area that is well ventilated to carry toxic fumes and dust away.
- Dispose of paint and solvents properly.

HIGH-PRESSURE FUEL SYSTEM OPENING RISK

High-pressure fluid remaining in fuel lines can cause serious injury. Do not disconnect or attempt repair of fuel lines, sensors, or any other components between the high-pressure fuel pump and nozzles on engines with High Pressure Common Rail (HPCR) fuel system. Only technicians familiar with this type of system can perform repairs. Consult your engine representative.

AVOID HIGH-PRESSURE FLUIDS

Inspect hydraulic hoses periodically – at least once per year – for leakage, kinking, cuts, cracks, abrasion, blisters, corrosion, exposed wire braid or any other signs of wear or damage. Replace worn or damaged hose assemblies immediately with approved replacement parts. Escaping fluid under pressure can penetrate the skin causing serious injury.

Avoid the hazard by relieving pressure before disconnecting hydraulic or other lines. Tighten all connections before applying pressure. Search for leaks with a piece of cardboard.

SAFE COOLING SYSTEM SERVICE

Explosive release of fluids from pressurized cooling system can cause serious burns. Shut off engine. Only remove filler cap when cool enough to touch with bare hands. Slowly loosen cap to first stop to relieve pressure before removing completely.

AVOID HEAT NEAR PRESSURIZED FLUID LINES

Flammable spray can be generated by heating near pressurized fluid lines, resulting in severeburns to yourself and bystanders. Do not heat by welding, soldering, or using a torch near pressurized fluid lines or other flammable materials.

Pressurized lines can accidentally burst when heat goes beyond the immediate flame area.

Any fluid injected into the skin must be surgically removed within a few hours or gangrene may result. Doctors unfamiliar with this type of injury should reference a knowledgeable medical source.

WELDING NEAR ELECTRONIC CONTROL UNIT (ECU)

If welding is required around the engine, or in the engine room, ask first for a permission from the person in charge. Do not jump-start engine with arc welding equipment. Currents and voltages delivered are too high and may cause permanent damage. Direct welding onto the engine is forbidden.

1. Disconnect the negative (-) battery cable(s).
2. Disconnect the positive (+) battery cable(s).
3. Connect the positive and negative cables together. Do not attach to engine support frame.
4. Clear or move any wiring harness sections away from welding area.
5. Connect welder ground close to welding point and away from control units.
6. After welding, reverse Steps 1-5.

STATIC ELECTRICITY RISK

The removal of sulfur and other compounds in Ultra-Low Sulfur Diesel (ULSD) fuel decreases its conductivity and increases its ability to store a static charge. Refineries may have treated the fuel with a static dissipating additive.

However, there are many factors reducing the effectiveness of the additive over time. Static charges can build up in ULSD fuel while it is flowing through fuel delivery systems. Static electricity discharge in presence combustible vapors could result in a fire or explosion.

Therefore, it is important to ensure that the entire system used to refuel your engine (fuel supply tank, transfer pump, transfer hose, nozzle, and others) is properly grounded and bonded.

Consult your fuel or fuel system supplier to ensure that the delivery system is in compliance with fueling standards for proper grounding and bonding practices.

HANDLE FUEL SAFELY - AVOID FIRES

Handle fuel with care: it is highly flammable. Do not refuel the engine while smoking or when near open flame or sparks.Always stop engine before refueling. Prevent fires by keeping engine room clean of accumulated trash, grease, and debris. Always clean up spilled fuel. Use only an approved fuel container for transporting flammable liquids. Do not store fuel container where there is an open flame, spark, or pilot light such as within a water heater or other appliance.

BE PREPARED FOR EMERGENCIES

Be prepared if a fire starts. Keep a first aid kit and fire extinguisher handy. Keep emergency numbers for doctors, ambulance service, hospital, and fire department near your telephone.

HANDLE STARTING FLUID SAFELY (ETHER)

Starting fluid is highly flammable. Keep all sparks and flame away if using it. Keep starting fluid away from batteries and cables.

To prevent accidental discharge when storing the pressurized can, keep the cap on the container, and store in a cool, protected location. Do not incinerate or puncture a starting fluid container. Do not use starting fluid on an engine equipped with glow plugs or an air intake heater.

HANDLING BATTERIES SAFELY

If not handled properly, batteries are a potential source of hazards. Excess of gases in batteries may explode. Keep sparks and flames away from batteries. **Never use a cigarette lighter to observe electrolyte level**. Use a flashlight to do it. Never check battery charge in shorting posts with a metal part. Use a voltmeter or hydrometer.

Always remove grounded (-) battery clamp first and replace grounded clamp last. Sulfuric acid in battery electrolyte is poisonous and strong enough to burn skin, eat holes in clothing, and cause blindness if splashed into eyes.

Avoid hazards and acid burns in :

- Filling batteries in a well-ventilated area
- Wearing eye protection and rubber gloves
- Avoiding use of air pressure to clean batteries
- Avoiding breathing fumes when electrolyte is
- Avoiding spilling or dripping electrolyte
- Using correct battery booster or charger procedure.

If acid is spilled on skin or in eyes:

- Flush skin with water
- Apply baking soda or lime to help neutralize the acid
- Flush eyes with water for 15-30 minutes.
- Get medical attention immediately.

If acid is swallowed:

- Do not induce vomiting
- Drink large amounts of water or milk, but do not exceed 2 L (2 qt.)
- Get medical attention immediately.

PREVENT BATTERY EXPLOSIONS

Keep sparks, lighted matches, and open flame away from the top of battery. Battery gas can explode. Never check battery charge by placing a metal object across the posts. Use a volt-meter or hydrometer. Do not charge a frozen battery: it may explode. Warm up battery to 16°C (60°F) before doing it.

WARNING !

Battery posts, terminals, and related accessories contain lead and lead compounds. Rinse hands after handling batteries.

FROST PROTECTION-WINTERIZATION

See Maintenance Section 08 - Raw Water System - Risk of icing conditions / Protection against frost.

WARNING !

When the engine has been set for winterization, place "**DO NOT OPERATE**" labels onto taps, valves, parts of equipment which have been turned off. Place a large and visible reminder on the wheelhouse dashboard.

LIVE WITH SAFETY

Before returning engine to customer, make sure engine is functioning properly, especially the safety systems. Make sure that all guards and shields are in place.

PREVENT ACCIDENTS

IMPORTANT !

When engine is OFF, always set the transmission lever to neutral position.

SUMMARY

S03 FLUIDS 17
SUMMARY 17
FUELS 18
DIESEL FUEL 18
SULPHUR CONTENT 18
WINTER DIESEL 18
WATER IN FUEL 18
MICROORGANISMS IN FUEL 18
INERT IMPURITIES IN FUEL 19
DIESEL LUBRICANTS 19
PRECAUTIONS TO UNDERTAKE 19
OILS RECOMMENDED OR AUTHORIZED 19
GENERALITIES 19
OILS VISCOSITY 20
CORRESPONDENCE BETWEEN API AND ACEA OILS 20
COOLANTS 21
COOLANT DRAIN INTERVALS 21
WATER PROPERTIES 21
WATER PROPERTIES TO MIX WITH COOLANT CONCENTRATE 21
OTHER COOLANTS 22
FREEZE PROTECTION 22
REQUIRED QUANTITY OF COOLANT VS COOLING SYSTEM CAPACITY 22
OPERATING ENGINE IN WARM TEMPERATURE CLIMATES 22
DISPOSING OF WASTE FLUIDS 23
ANNEX 24
ANNEX 1. VOLUME OF GLYCOL 24

FUELS

DANGER !

Fuels and some fluids on board ships are easily flammable. Handle fuels with care and respect all safety rules. Do not refuel the tank while the engine is running. Do not smoke during the filling process or in the engine compartment. Ventilate the engine compartment before starting. Wear protective gloves and eye protective glasses. Avoid synthetic clothing which can melt when ignited. Always keep a fire extinguisher nearby.

DIESEL FUEL

Diesel approved by Nanni Industries on the engines of the firm are as follows :

- EN 590 (Europe),
- ASTM D975 (U.S.A and territorial waters assimilated, particularly in the Caribbean and Pacific areas),
- BS 2869 Part 1 Class A1 (G.B),
- JIS KS2204 Fuel N°02 (Japan).

These regulations are in compliance with ISO 8217 DMX.

SULPHUR CONTENT

European Union :
Low-sulphur diesel (<50 mg/kg sulphur) [EN590], or sulphur-free (<50 mg/kg sulphur [DIN EN590], [ULSD].

Non-European Union :
Sulphur contained in diesel fuel not in accordance with EN 590 regulation significantly reduces the performance of the engine lubricant. More frequent oil changes are mandatory and also induce much shorter fuel filter replacement intervals. Request a certificate of specifications from the fuel distributor and forward it to the nearest Nanni local representative for advice and action.

Fuels not intended for the operation of marine engines or with very high sulphur content can cause irreparable damage to the engine and are not covered by any warranty from Nanni Industries.

WINTER DIESEL

Without specific mention, these distributed fuels satisfy the climates in which they are geographically available. Generally speaking, summer diesel fuel complying with EN 590 is usable down to a temperature of 0°C [32°F], and the winter formulated fuel, down to a temperature of -20 °C [-4°F] (type No. 01-D in U.S.A). In any case, consult your local distributor to ensure compatibility of the fuel.

NOTE !

Additions of petroleum distillates, petrol, solvents, unapproved additives to improve the fluidity of diesel fuel at very low temperatures can cause irreparable engine damage and will void all contractual warranties and responsabilities from Nanni Industries.

WATER IN FUEL

Water is a non-flammable and incompressible liquid. For this reason, its presence is particularly harmful to the operation of the engine and to the entire fuel injection system. Water easily enters the tank by simple condensation and especially when it is left or partially empty. Fill up the fuel tank before storage/winter storage. Check the water-diesel separator regularly and clean it as required. Anticipate the replacement of the fuel filter. If a large quantity of water is present in the tank, drain it and flush the entire fuel and injection system with clean diesel fuel. Water in the diesel fuel can cause irreparable damages to the engine and are not covered by any warranty from Nanni Industries.

MICROORGANISMS IN FUEL

The presence of water in the tank automatically leads microorganisms and bacteria to grow and will mix with the fuel. These microorganisms grow rapidly with a favorable temperature. Depending on their size, they can pass through filters and penetrate in the fuel injection system and cause a total engine failure which is not covered by Nanni Industries warranty. In the event of fuel contamination, contact the nearest Nanni agent who may, if necessary, use an approved disinfectant.

INERT IMPURITIES IN FUEL

Others impurities than microorganisms and bacteria do exist : they are rust debris falling out from the internal walls of the metal tanks. Some types of fiberglass tanks are also subject to osmosis over time and tiny particles may come off internal walls and circulate in the diesel fuel. These impurities can pass through the filters and creep into the injection system and cause a total failure of the engine which is not covered by Nanni Industries warranty.

DIESEL LUBRICANTS

PRECAUTIONS TO UNDERTAKE

Engine oils must be handled with care, both for reasons of safety and the risk of pollution for the environment.

Due to their inertia, hot oils retain a higher temperature than expected. A hot oil can cause severe burns on the skin and leave after effects. This phenomenon is emphasized when draining used oil. Wear protective gloves and eye protective glasses. Avoid synthetic clothing.

To avoid introducion of impurities into the engine during filling or topping up, be sure to thoroughly clean the filler inlet hole first and use a container free of any contamination.

OILS RECOMMENDED OR AUTHORIZED

It is necessary to differentiate the breaking-in oils from the lubricating oils after running-in. All engine manufacturers do not have the same recommendations. User manuals provide information about proper oils to use for running-in (if recommended) and at which running hours and of time lapse of run.

GENERALITIES

The oil used in the engine must have a viscosity in accordance with the ambient temperatures at which the engine is operated, according to API (American Petroleum Institute) and SAE (Society of Automotive Engineers) classifications.

Following the entry into force of strict antipollution regulations, engine oils have been developed for use with low sulphur fuels (LSD or ULSD). The oils classified “CF” being now obsolete, use oils “CJ-4, CI-4, CH-4”.

The oils “CH-4” do come in replacement of the “CD, CJ, CF-4 and CG- 4“. In all cases, the use of high sulphur fuel significantly reduces the span between oil changes whichever oil is used.

OILS VISCOSITY

Viscosity is a characteristic of oil flow or fluidity, defined by two numbers: cold and hot. Example :

15W-40: cold viscosity index followed by the letter W signifying winter. A low value indicates good fluidity at low temperatures.

15W-40: hot viscosity index (100 °C - summer). A high value indicates a better lubrication at hot temperatures.

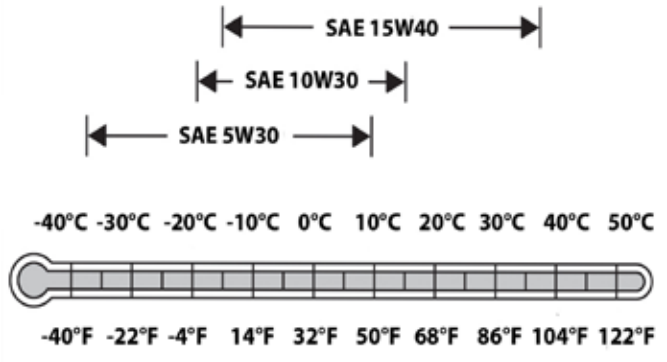

Normative instances :

- Society of Automotive Engineers (SAE),
- American Petroleum Institute (API),
- Association des Constructeurs Européens d'Automobiles (ACEA),
- Japanese Automobile Manufacturer Association (JAMA).

IMPORTANT !

On manufacturers side, oils are subject to constant improvements, particularly concerning the additives allowing a better resistance towards oxydation and fuel economy. Refer to the expertise of the local Nanni Industries representative regarding the oil that best suits your engine.

CORRESPONDENCE BETWEEN API AND ACEA OILS

API	ACEA - JAMA
CG-4	ACEA E1
CF-4	ACEA E2 ; ACEA E3
CH-4	ACEA E5 ; JAMA DH 5
CI-4	ACEA E7
CJ-4	ACEA E9 ; JAMA DH 2

DIESEL SULPHUR CONTENT

NOTE

Diesel sulfur content affects engine oil and filter service intervals.

Use of diesel fuel with sulfur content less than 2000 mg/kg (2000 ppm) is RECOMMENDED.

Use of diesel fuel with sulfur content of 2000-5000 mg/kg (2000-5000 ppm) REDUCES by 50% the oil and filter change interval.

Do not use diesel fuel with sulfur content greater than 5000 mg/kg (5000 ppm).

IMPORTANT !

To avoid engine damage:

Reduce oil and filter service intervals by 50% when using BioDiesel blends greater than B20. Oil analysis may allow longer service intervals.

Use only approved oil types.

COOLANTS

WARNING !

Products not fulfilling the demands in this section may lead to faults and damage occurring in the cooling system. This can lead to the invalidation of Nanni's warranty for faults and damage caused by the use of inappropriate coolant.

COOLANT DRAIN INTERVALS

Drain and flush the cooling system of the engine and refill with fresh coolant at the indicated intervals, which depends of the coolant used and of the maintenance schedule service of the engine.

WATER PROPERTIES

Water properties are important to the efficiency of the cooling system. Distilled, deionized, or demineralized water is recommended for mixing with ethylene glycol or propylene glycol base engine coolant concentrate.

IMPORTANT !

- Do not use cooling system sealing additives, neither antifreeze containing sealing additives.
- Do not mix ethylene glycol and propylene glycol base coolants together.
- Do not mix coolants of various brands and makes together.
- Do not use coolants containing nitrites.

WATER PROPERTIES TO MIX WITH COOLANT CONCENTRATE

Engine coolants are a combination of three chemical components: ethylene glycol (EG) or propylene glycol (PG) antifreeze, inhibiting coolant additives, and adequate “quality” water.

Do not use bottled drinking water as it often contains higher concentrations of dissolved solids.

Water used in the cooling system should meet the following minimum specifications for quality :

Chlorides	< 40 mg / L
Sulfates	< 100 mg / L
Total dissolved solids	< 340 mg / L
Total hardness	< 170 mg / L
pH	5,5-9,0

When mixing coolant concentrate with water, do not use less than 40 % or greater than 60 % concentration of coolant. Less than 40 % is inadequate for corrosion protection. Greater than 60 % can result in coolant gelation (solidification by cooling) and cooling system problems. As a general rule, a mixing of 50/50% is preferred whenever possible.

OTHER COOLANTS

Other ethylene glycol or propylene glycol base coolants may be used if they meet the following specification :

- Pre-mix coolant meeting ASTM D6210 requirements.
- Coolant concentrate meeting ASTM D6210 requirements in a 40-60 % mixture of concentrate with appropriate water.

If coolant meeting one of these specifications is unavailable, use a coolant concentrate or pre-mix coolant that has a minimum of the following chemical and physical properties :

- Provides cylinder liner cavitation protection according to a proven and recorded method or a fleet study run at or above 60 % load capacity.
- Is formulated with a nitrite-free additive package.
- Protects the cooling system metals (cast iron, aluminum alloys, and copper alloys such as brass) from corrosion.

FREEZE PROTECTION

The relative concentrations of glycol and water in the engine coolant determine the freezing protection limit.

IMPORTANT !

DO NOT use a coolant-water mixture greater than 60% ethylene glycol or 60% propylene glycol. Refer to the table below :

Ethylene Glycol	Freeze protection limit
40%	-24°C (-12°F)
50%	-37°C (-34°F)
60%	-52°C (-62°F)
Propylene Glycol	**Freeze protection limit**
40%	-24°C (-12°F)
50%	-37°C (-34°F)
60%	-52°C (-62°F)

REQUIRED QUANTITY OF COOLANT VS COOLING SYSTEM CAPACITY

See ANNEX 1: VOLUME OF GLYCOL

OPERATING ENGINE IN WARM TEMPERATURE CLIMATES

Nanni engines are designed to operate with recommended engine coolants quoted in this chapter.

Always use a recommended engine coolant, even when operating in geographical areas where freeze protection is not required (internal engine corrosion protection).

IMPORTANT !

Tap clean water may be used as coolant substitute in emergency situations only. Contact a Nanni representative as soon as it is possible for assistance. Get this water flushed as soon as possible.

Running the engine with water only will make this substitute coolant to foam, aluminum and iron parts of the engine will be subject to fast internal corrosion, along with scaling, and cavitation occurances, even with coolant conditioners.
When cooling system has been drained from the engine, refill with recommended coolant as soon as possible.

DISPOSING OF WASTE FLUIDS

Prior to contemplate any draining, make sure that all adequate gear such as : funnel(s), hose(s), suitable container(s) and so on, are at hand.

Use leakproof containers when draining fluids. Do not use food or beverage containers that may mislead someone into drinking from them.

Wear gloves and eye protection glasses. Follow all safety rules. Wait for engine to cool down.

Do not let waste to drip on the ground, down a city drain, or into any water source. Improperly disposing of engine coolants, oils, or other chemical fluids is a threat against environment and is an offence in many countries.

Inquire on the proper way to recycle or dispose of waste from your local environmental or recycling center, or from your Nanni engine representative or service dealer.

ANNEX

ANNEX 1. VOLUME OF GLYCOL

% by volume of Glycol	30	35	40	45	50	Cooling system capacity in dm³
Ice slush starts to form at °C	-16	-21	-24	-30	-37	
Ice slush starts to form at °F	3.2	-5.8	-11.2	-22	-34.6	
Ethylene glycol dm³ (litre)	9	11	12	14	15	30
	12	14	16	18	20	40
	15	18	20	23	25	50
	18	21	24	27	30	60
	21	25	28	32	35	70
	24	28	32	36	40	80
	27	32	36	41	45	90
	30	35	40	45	50	100
	33	39	44	50	55	110
	36	42	48	54	60	120
	39	46	52	59	65	130
	42	49	56	63	70	140
	45	53	60	68	75	150
	48	56	64	72	80	160
	51	60	68	77	85	170
	54	63	72	81	90	180
	57	67	76	86	95	190
	60	70	80	90	100	200

Volume of glycol below 30% to be avoided.

ENGINE IDENTIFICATION

NOTE !

Minor engine details may not be exactly as shown. Some components may not be part of the engine ordered. Not binding pictures.

Both the engine and the transmission have an identification plate containing important informations.

Keep these plates accessible and in good condition. Record and keep the engine and transmission serial number and designation. These numbers should always be quoted when ordering service and replacement parts. Depending of engine, identification plate is as follow :

Or :

TYP indicates the commercial designation of the engine.
• NR indicates the engine serial number.
• CODE lists various specifications of the engine.

Example :

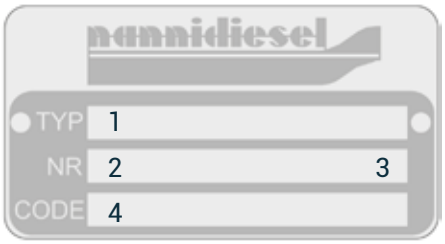

1 : Type of engine
2 : Engine number
3 : Engine code
4 : Nanni number

ORIGINAL SUPPLIER ENGINE PLATE

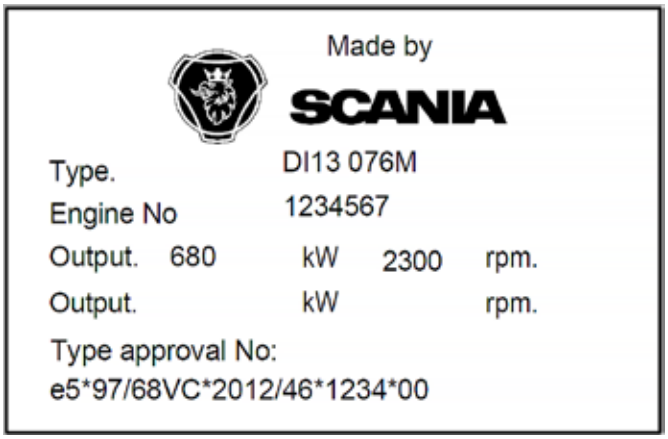

Example : **DI13 076M**

DI : Supercharged diesel engine with watercooled charge air cooler.
13 : Displacement in whole dm³.
076 : Performance and certification code. The code indicates, together with the application code, the normal gross engine output.
M : Code for application. M means for marine use.

S04 ENGINE WARRANTY

ENGINE HOMOLOGATION

The engine type can be exhaust emission certified. It means that Nanni guarantees that all engines of the same type that are manufactured are approved and certified by the authorities in accordance with different exhaust emissions standards.

However, for the engine to be in accordance with this standards, special requirements for maintenance and service are to be followed :

- Only Nanni replacement parts must be used.
- Maintenance intervals must be observed.
- The engine must not be modified in any way except with accessories and service kits approved by Nanni Industries S.A.S. France.
- Service of the fuel system must always be carried out by an authorized Nanni workshop.
- No modifications to the air intake and exhaust system may be undertaken.
- Seals may only be broken by authorized personnel.
- The operation instructions stated in the relevant manuals should be follow by the user.

Nanni's responsibility for the engine specification being in accordance with the certification will be invalidate if one or several of this conditions are not followed.

ENGINE RESPONSABILITY

Nanni designs its engines to have minimum environmental impact. This objective, however, can only be achieved with your full cooperation.

Our operating and maintenance instructions are to help you to protect your engine and adopt environmentally responsible behaviour.

Ensure you only use the fuels and oils recommended. Using another type of fuel or oil could cause major malfunctions, an higher fuel consumption, a reduced engine service life, and a greater discharge of exhaust gases.

When draining the oil and changing the oil or fuel filter, dispose of the waste in an appropriate container. These fluids cause major damage to flora and fauna if discharged into nature. Use an absorption kit in the event of accidental discharge of oil or fuel into the water.

WARRANTY

This manual is supplemented by a Warranty Information Booklet. We recommend that you read this publication thoroughly.

Pay special attention to the applicable duty cycle and to the resulting limitations. Failure to comply with the warranty conditions will void the Warranty.

The validity of the Warranty is also dependent on proper installation and maintenance operation being carried out by an authorized Nanni representative.

NOTE !

Late or improper maintenance or use of spare parts other than Nanni original spare parts will invalidate Nanni's responsibility for the engine accordance with homologation and will void the Warranty.

Modifications to the engine's settings, as well as any other technical modification (accessories, spare parts, additional equipment, etc) ***ARE FORBIDDEN WITHOUT WRITTEN AUTHORIZATION FROM NANNI INDUSTRIES S.A.S.***

Any modification will void the Warranty. Damage caused by failure to follow operation instructions or incorrect operation is also not covered by the warranty.

PROPOSITION 65 STATE OF CALIFORNIA

WARNING !

Diesel engine exhaust and some of its constituants are known to the state of California to cause cancer, birth defects, and other reproductive harm.

Battery posts and terminals, related devices do contain lead or lead compounds, chemicals known to the State of California to cause cancer, birth defects or other reproductive harm. Thoroughly wash your hands after handling any of the above components.

EPA WARRANTY

EPA and CARB warranties only apply to new engines having the certification label affixed to the engine and sold as stated above in the geographic areas.

The presence of an EU number signifies that the engine has been certified with the European Union countries per Directive 97/68/EC. The EPA and/or CARB emissions warranties do not apply to the EU countries.

When applied onto engine, Emission Control label must never be removed from engine block neither covered with a layer of paint. This label is the evidence showing that the engine is meeting U.S emissions regulations. It must be kept available at anytime once the vessel has entered waters being in the scope of the North American Emission Control Area (ECA).

EMISSION CONTROL SYSTEM(S) LAWS

The U.S. EPA and CARB prohibit the removal or rendering inoperative of any device or element of design installed on or in engines/equipment in compliance with applicable emission regulations prior to or after the sale and delivery of the engines/equipment to the ultimate purchaser.

EUROPEAN UNION (EU) DECLARATION OF EMISSIONS CONFORMITY

The presence of an EU number on the label signifies that the Marine Diesel Engine has been certified with the European Union countries per Directives 97/68/EC as amended by Directive 2004/26/EC. The EU engine family is listed on the Emissions Label.

When installed in accordance with the manufacturer's instructions, Nanni Industries Marine Diesel Propulsion Engines without integral exhaust certified under Directive 97/68/EC as amended by Directive 2004/26/EC produce exhaust emissions of carbon monoxide, hydrocarbons, nitrogen oxides and particle emissions complying with the requirements of the Recreational Craft Directive 2003/44/EC.

SUMMARY

S05 INSTRUMENTATION 28
SUMMARY 28
INTRODUCTION 29
PRODUCT IDENTIFICATION 29
FRONT SIDE 29
PRESENTATION 29
START BUTTON 29
NAVIGATION SCROLL BUTTON (HIDE) 29
NAVIGATION SCROLL BUTTON 29
STOP BUTTON (MUTE) 29
ELECTRICAL CONNECTIONS 31
DISPLAYED DATA 32
SAFEGUARD FUNCTION 32
FAULT CODES 33
SYSTEM LAYOUT INCLUDING OPTIONS 40

INTRODUCTION

This chapter is intended for professionals and seasoned technicians. Users of this equipment are assumed to be fluent in handling marine systems, and must be able to carry out related electrical tasks. This chapter describes the features of the unit, the use and specifications.

Including software embedded, the SI.3 is a 3.5" full-colour display with Linux operating system. The screen is a QVGA high brightness display and hardware accelerated. With configurable backlit soft keys, operators can interact efficiently with the engine. The SI.3 has multifunctional capability and is used as instrumentation display machine control. This chapter provides important information regarding the proper use of the device.

PRESENTATION

The screen displays engine informations and allows the Start and Stop of the SCANIA engines through two push buttons (top and bottom).

A pulse on the **Start** push button (top) will send a start message on the CAN bus, which, in turn will crank the engine.

A pulse on **Stop** push button (bottom) will send a stop message on the CAN bus, stopping the engine.

The screen will also display engine occuring error event through the CAN bus network.

Above: front view of the SI.3 showing display screen during booting sequence.

PRODUCT IDENTIFICATION

Each unit bears two identification labels with serial number, part number and revision which identifies the unit. This information is required when technical support is needed.

FRONT SIDE

Panel buttons

Command buttons are located on the right side of the unit. An Led is coming up when relevant button is activated.

REAR SIDE

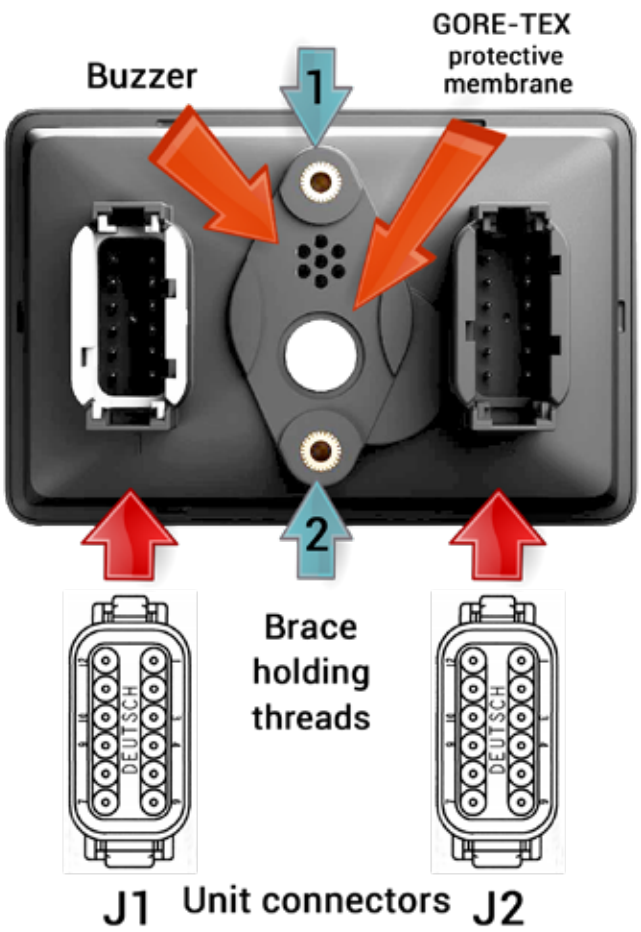

Connectors layout

Pin	Function	Pin	Function
J1-1	Power 12/24V	J2-1	Configurable input -1
J1-2	GND	J2-2	Configurable input -2
J1-3	Switched power	J2-3	Configurable input -3
J1-4	Switched output 1	J2-4	Configurable input -4
J1-5	Switched output 2	J2-5	Analog GND
J1-6	CAN 1 Shield	J2-6	Analog input - 1
J1-7	CAN 1 +	J2-7	Analog input - 2
J1-8	CAN 1 -	J2-8	Analog input - 3
J1-9	USB GND	J2-9	Ethernet RD+
J1-10	USB Data -	J2-10	Ethernet RD-
J1-11	USB Data-	J2-11	Ethernet TD+
J1-12	USB Vbus	J2-12	Ethernet TD-

DIMENSIONS & WEIGHT

The rugged unit is made of thermoplastic polymer compound (PBT), impact resistant and flame retarded.

Item	Description
Dimensions	119,9 (W) x 79,6 (H) x 49 (D), in mm
Weight	0,250 kg
Spacing threads	48,5 mm
Threads dimension	M5
Threads depth	7,7 mm
Enclosure	PBT+ PC plastic

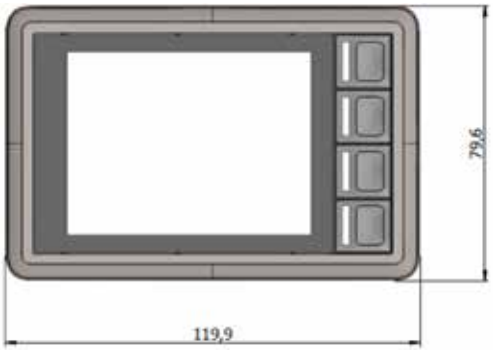

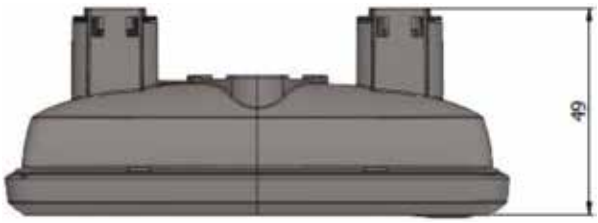

MOUNTING

The SI.3 supports two different mounting methods, a RAM mount or a panel mount. These two mounting methods are described below.

For both fastening methods, use the appropriate M5 x 0.8 button head screw of type MRT (Torx).

The recommended torque for the screws is of 1.5-2.0 Nm. Using fluid locker or locking washers (split ring, toothed lock, etc.) is required for good securing. Ensure that the M5 mounting screws are clean and dry before mounting.

Bracket (RAM) mount :

Bracket kneecap ref is:
RAM-B-238U

Panel mount:

Panel mounting requires a bracket (P/N C000135-81) and a rubber frame (P/N C000144-44) as per picture below. The mounting bracket is designed for min 1,5 mm and max 3 mm panel thickness. Screw length should be of 10 mm.

Ensure that the SI.3 is mounted onto a smooth and flat surface. Fastening the unit to an uneven surface may stress the enclosure, damage the outer flange or possibly even flex the circuit board inside, leading to a premature breakdown. Below, cutout template dimensions:

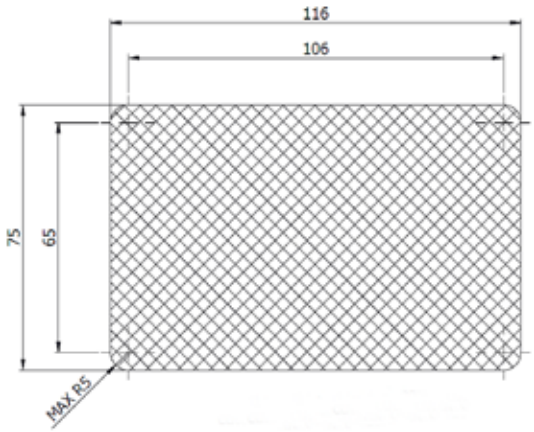

ELECTRICAL CONNECTIONS

Once the SI.3 has been fitted in place, connections must be made. The harness is a plug and play system and is delivered with relevant poka-yoke connectors for troublefree connection to the Engine Control Box. To this purpose, a cable extension may be required.

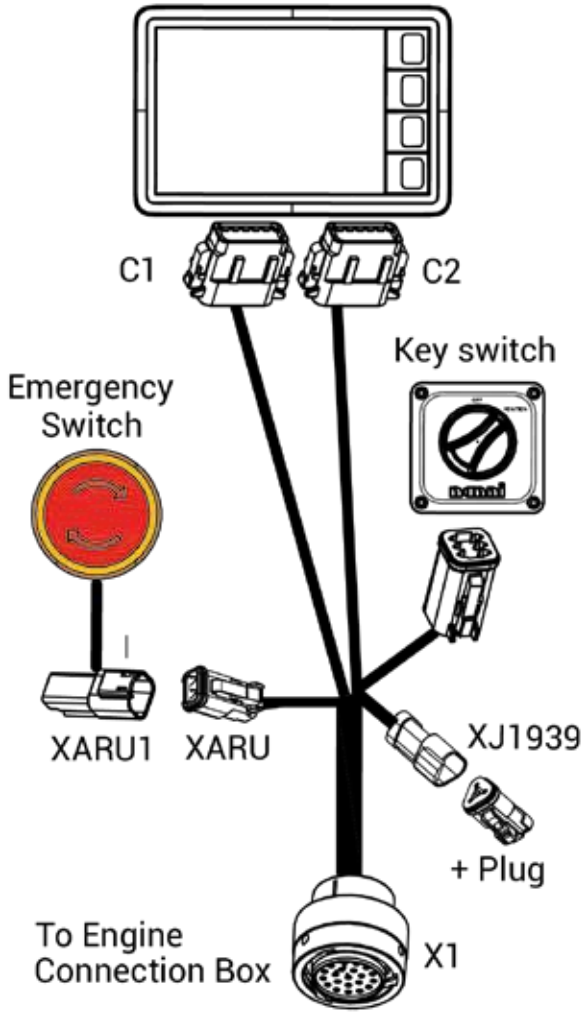

Provision is made for wheelhouse standalone or wheelhouse + flybridge connection. Above harness 674760 is identical either for wheelhouse or for flybridge connection. See end of chapter for complete configuration layout drawing with options.

Internal electrical protection

The unit is internally short circuit protected to -32V to +32 V.

DISPLAYED DATA

After powering, and after SI.3 booting, the normal sequence displays engine function parameters such as :

Engine Rotary peer minutes : xxxx Tr/min or RPM
Engine Oil pressure : xx Bar
Engine Température : xxx °C
Engine Battery Voltage: xx V
Engine hours : xxx hrs
Engine Load : xxx %
Throttle position. xxx %
Engine Fuel Rate: xxx L/min
Engine Boost pressure : xx kPa

Normal sequence operation

During normal operation, the screen display is as below:

Fault sequence operation

When an engine fault occurs, several events will be displayed on the SI3 screen.

1. The background of the screen will turn white and a pop up with an engine icon will be displayed. Underneath, it will show SPN, FMI and OC numbers.

2. The buzzer will sound.

3. This pop up may be removed during 20 sec in pressing the second button on the right side of the unit, activating the HIDE function.

4. The display returns to normal operation and, after a delay, the pop up fault will come back if fault has not been resolved in the mean time.

5. The buzzer may be disabled in pressing the bottom right button (MUTE).

Below, an example of fault pop up :

SAFEGUARD FUNCTION

The SI.3 being only an engine status display, there is no safeguard to disable the engine start when transmission is engaged forward or backward.

A Safeguard interlock is located in the Engine Control Box through the Neutral Safety Switch Port. It is the duty of the shipyard to make the appropriate wiring.

Upon delivery, the Neutral Safety Switch port is shorted to allow preliminary engine tests only. The engine supplier has no responsability in case of improper safeguard wiring.

FAULT CODES

Fault codes generated in the CAN network are sent via CAN message DM1. This document describes how to interpret these fault codes from the DM1 message.

Abbreviations used

FMI = Fault Mode Identifier
SPN = Suspected Parameter Number
OC = Over Crank _ Number of faults occurances

Explanation table of FMI codes

Code	Explanation
0	Data valid but above normal operational range (that is, engine overheating)
1	Data valid but below normal operational range (that is, engine oil pressure too low)
2	Data erratic, intermittent, or incorrect
3	Voltage above normal or shorted high
4	Voltage below normal or shorted low
5	Current below normal or open circuit
6	Current above normal or grounded circuit
7	Mechanical system not responding properly
8	Abnormal frequency, pulse width, or pending
9	Abnormal update rate
10	Abnormal rate of change
11	Failure mode not identifiable
12	Bad intelligent device or component
13	Out of calibration
14	Special instructions
15	Data valid but above normal operating range - least severe level
16	Data valid but above normal operating range - moderately severe level
17	Data valid but below normal operating range - least severe level
18	Data valid but below normal operating range - moderately severe level
19	Received network data in error
20	Data drifted high
21	Data drifted low

Explanation table of SPN codes

SPN	SPN Name	SPN Description
46	Pneumatic Supply Pressure	Pneumatic pressure in the main reservoir, sometimes referred to as the wet tank.
51	Engine Throttle Valve 1 Position	Position of the valve used to regulate the supply of a fluid, usually air or fuel/air mixture, to an engine.
91	Accelerator Pedal Position 1	The ratio of actual position of the analogue engine speed/torque request input device (such as an accelerator pedal or throttle lever) to the maximum position of the input device.
94	Engine Fuel Delivery Pressure	Gage pressure of fuel in system as delivered from supply pump to the injection pump.
97	Water In Fuel Indicator	Signal which indicates the presence of water in the fuel.
98	Engine Oil Level	Ratio of current volume of engine sump oil to maximum required volume.
100	Engine Oil Pressure	Gauge pressure of oil in engine lubrication system as provided by oil pump.
102	Engine Intake Manifold #1 Pressure	The gauge pressure measurement of the air intake manifold.
103	Engine Turbocharger 1 Speed	Rotational velocity of rotor in the turbocharger.
105	Engine Intake Manifold 1 Temperature	Temperature of pre-combustion air found in intake manifold number 1 of engine air supply system.
107	Engine Air Filter 1 Differential Pressure	Change in engine air system pressure, measured across the filter, due to the filter and any accumulation of solid foreign matter on or in the filter.
108	Barometric Pressure	Absolute air pressure of the atmosphere.
110	Engine Coolant Temperature	Temperature of liquid found in engine cooling system.
111	Engine Coolant Temperature	Ratio of volume of liquid found in engine cooling system to total cooling system volume.
131	Engine Exhaust Back Pressure	Mass flow rate of fresh air entering the engine air intake, before any EGR mixer, if used.
132	Engine Intake Air Mass Flow Rate	
156	Engine Injector Timing Rail 1 Pressure	The gage pressure of fuel in the timing rail delivered from the supply pump to the injector timing intake.
167	Charging System Potential (Voltage)	Electrical potential measured at the charging system output. The charging system may be any device charging the batteries.
168	Battery Potential/Power Input 1	This parameter measures the first source of battery potential as measured at the input of the ECM/actuator etc. coming from one or more batteries, irrespective of the distance between the component and the battery.
171	Ambient Air Temperature	Temperature of air surrounding vessel / engie compartment.
172	Engine Air Intake Temperature	Temperature of air entering vehicle air induction system.
174	Engine Fuel Temperature 1	Temperature of fuel passing through the first fuel control system.
175	Engine Oil Temperature 1	Temperature of the engine lubricant.
188	Engine Speed At Idle, Point 1 (Engine Configuration)	Stationary low idle speed of engine which includes influences due to engine temperature (after power up) and other stationary changes (calibration offsets, sensor failures, etc).
190	Engine Speed	Actual engine speed which is calculated over a minimum crankshaft angle of 720 degrees divided by the number of cylinders.
234	Software Identification	Software identification of an electronic module.

Continuing next page on SPN # 532.

SPN	SPN Name	SPN Description
532	Engine Speed At High Idle, Point 6 (Engine Configuration)	Engine speed of high idle of the engine torque map.
558	Accelerator Pedal 1 Low Idle Switch	Switch signal which indicates whether the accelerator pedal kickdown switch is opened or closed.
559	Accelerator Pedal Kickdown Switch	Switch signal which indicates whether the accelerator pedal kickdown switch is opened or closed.
590	Engine Idle Shutdown Timer State	Status signal which indicates the current mode of operation of the idle shutdown timer system.
597	Brake switch	Switch signal which indicates that the driver operated brake foot pedal is being pressed.
598	Clutch switch	Switch signal which indicates that the clutch pedal is being pressed.
636	Engine position sensor	
641	Engine Variable Geometr Turbocharger Actuator #1	Actuator that controls the variable geometry turbocharger geometry.
645	Engine Tachometer Signal Output	
651	Engine Injector Cylinder #01	
652	Engine Injector Cylinder #02	
653	Engine Injector Cylinder #03	
654	Engine Injector Cylinder #04	
655	Engine Injector Cylinder #05	
656	Engine Injector Cylinder #06	
657	Engine Injector Cylinder #07	
658	Engine Injector Cylinder #08	
677	Engine Starter Motor Relay	Activates the starter.
723	Engine Speed 2	Engine Speed 2
788	Transmission Clutch Actuator	Identifies the status of the actuator that controls the clutch.
968	Engine Idle Increment Switch	Switch signal which indicates the position of the idle increment switch.
972	Accelerator Interlock Switch	Switch signal used to disable the accelerator and remote accelerator inputs, causing the engine to return to idle.
974	Remote Accelerator Pedal Position	The ratio of actual position of the remote analogue engine speed/torque request input device (such as an accelerator pedal or throttle lever) to the maximum position of the input device.
986	Requested Percent Fan Speed	Fan speed as a ratio of the actual fan drive (current speed) to the fully engaged fan drive (maximum fan speed).
1110	Engine Oil Temperature 2	Temperature of the engine lubricant.
1239	Engine Fuel Leakage 1	Status signal which indicates fuel leakage in the fuel rail of the engine. Location can be either before or after the fuel pump.
1322	Engine Misfire for Multiple Cylinders	When a misfire occurs in any one of the cylinders.

Continuing next page on SPN # 1323.

SPN	SPN Name	SPN Description
1323	Engine Misfire Cylinder #1	Engine misfire detected in cylinder.
1324	Engine Misfire Cylinder #2	Engine misfire detected in cylinder.
1325	Engine Misfire Cylinder #3	Engine misfire detected in cylinder.
1326	Engine Misfire Cylinder #4	Engine misfire detected in cylinder.
1327	Engine Misfire Cylinder #5	Engine misfire detected in cylinder.
1328	Engine Misfire Cylinder #6	Engine misfire detected in cylinder.
1329	Engine Misfire Cylinder #7	Engine misfire detected in cylinder.
1330	Engine Misfire Cylinder #8	Engine misfire detected in cylinder.
1442	Engine Fuel Valve 1 Position	The position of a gaseous fuel valve that is metering the fuel flow to the engine.
1443	Engine Fuel Valve 2 Position	The position of a gaseous fuel valve that is metering the fuel flow to the engine.
1483	Source Address of Controlling Device for Engine Control	The source address of the SAE J1939 device currently controlling the engine.
1484	Other ECUs Have Reported Fault Codes Affecting Operation	
1485	ECM Main Relay	
1569	Engine Protection Torque Derate	Torque has been derated for protection of the engine.
1632	Engine Torque Limit Feature	Torque limit rating described in the current record.
1675	Engine Starter Mode	Start cannot take place for one of several different reasons.
1761	Aftertreatment 1 Diesel Exhaust Fluid Tank Level	Ratio of volume of diesel exhaust fluid to the total volume of diesel exhaust fluid storage container.
2791	Engine Exhaust Gas Recirculation 1 (EGR1) Valve Control	Desired percentage of maximum Exhaust Gas Recirculation (EGR) valve opening.
2797	Engine Injector Group 1	A first collection of fuel injector circuits that are grouped together.
2798	Engine Injector Group 2	A second collection of fuel injector circuits that are grouped together.
2858	Machine Data Configuration 1	There is a problem involving the parameter list for the data structure for configuring operations within the Controller Application being communicated with.
2859	Machine Data Configuration 2	There is a problem involving one (or more) of the PGN(s) within the parameter list for the data structure for configuring operations within the Controller Application being communicated with.
2860	Machine Data Configuration 3	There is a problem involving the first output control list for the data structure for configuring operations within the Controller Application being communicated with.
2861	Machine Data Configuration 4	There is a problem involving the second output control list for the data structure for configuring operations within the Controller Application being communicated with.
2862	Machine Data Configuration 5	There is a problem involving the third output control list for the data structure for configuring operations within the Controller Application being communicated with.
3031	Aftertreatment 1 Diesel Exhaust Fluid Tank Temperature	Temperature of the diesel exhaust fluid in the storage tank.

Continuing next page on SPN # 3216.

SPN	SPN Name	SPN Description
3216	Aftertreatment 1 Intake NOx	The amount of combined NO and NO2 in the exhaust entering the aftertreatment system measured by a NOx sensor at the aftertreatment intake, represented in NOx molecule parts per million non-NOx molecules in exhaust bank 1.
3226	Aftertreatment 1 Outlet NOx	The amount of combined NO and NO2 in the exhaust entering the aftertreatment system measured by a NOx sensor at the aftertreatment outlet, represented in NOx molecule parts per million non-NOx molecules in exhaust bank 1.
3241	Aftertreatment 1 Exhaust Gas Temperature 1	The reading from the exhaust gas temperature sensor located farthest upstream in the aftertreatment system in exhaust bank 1.
3242	Aftertreatment 1 Diesel Particulate Filter Intake Gas Temperature	Temperature of engine combustion by-products entering the diesel particulate filter in exhaust bank 1.
3245	Aftertreatment 1 Exhaust Gas Temperature 3	The reading from the exhaust gas temperature sensor located farthest downstream in the aftertreatment system in exhaust bank 1.
3246	Aftertreatment 1 Diesel Particulate Filter Outlet Gas Temperature	Temperature of engine combustion by-products leaving the diesel particulate filter exhaust in exhaust bank 1.
3249	Aftertreatment 1 Exhaust Gas Temperature 2	The reading from the exhaust gas temperature sensor located midstream of the other two temperature sensors in the aftertreatment system in exhaust bank 1.
3251	Aftertreatment 1 Diesel Particulate Filter Differential Pressure	Exhaust differential pressure measured between the intake and exhaust of a diesel particulate filter in exhaust bank 1.
3275	Aftertreatment 2 Exhaust Gas Temperature 1	The reading from the exhaust gas temperature sensor located farthest upstream in the aftertreatment system in exhaust bank 2.
3279	Aftertreatment 2 Exhaust Gas Temperature 3	The reading from the exhaust gas temperature sensor located farthest downstream in the aftertreatment system in exhaust bank 2.
3283	Aftertreatment 2 Exhaust Gas Temperature 2	The reading from the exhaust gas temperature sensor located midstream of the other two temperature sensors in the aftertreatment system in exhaust bank 2.
3340	Engine Charge Air Cooler 1 Intake Pressure	Pressure of air at intake to 1st or only charge air cooler, from multiple first stage turbochargers being cooled and feeding multiple second stage turbochargers.
3360	Aftertreatment 1 Diesel Exhaust Fluid Controller	The Diesel Exhaust Fluid Controller has the ability to read attributes of the SCR system, including but not limited to, diesel exhaust fluid level, diesel exhaust fluid temperature, diesel exhaust fluid quality, and diesel exhaust fluid dosing rate.
3361	Aftertreatment 1 Diesel Exhaust Fluid Dosing Unit	The diesel exhaust fluid dosing unit is a device that mixes the diesel exhaust fluid and air, and delivers a metered quantity of this mixture to the exhaust stream.
3362	Aftertreatment 1 Diesel Exhaust Fluid Dosing Unit Input Lines	The diesel exhaust fluid dosing unit is a device that mixes the diesel exhaust fluid and air, such that it contains an input line from the air tank and an input line from the diesel exhaust fluid tank.
3363	Aftertreatment 1 Diesel Exhaust Fluid Tank Heater	Percentage of heating applied to the aftertreatment 1 diesel exhaust fluid tank heater.
3464	Engine Throttle Actuator 1 Control Command	The control command to throttle actuator 1, normalized to percent.
3468	Engine Fuel Temperature 2	Temperature 2 of fuel.
3471	Aftertreatment 1 Fuel Pressure Control Actuator	Diagnostic SPN for the actuator controlling aftertreatment 1 fuel pressure.
3472	Aftertreatment 1 Air Pressure Control Actuator	
3480	Aftertreatment 1 Fuel Pressure 1	First fuel pressure measurement for the aftertreatment 1 system.
3485	Aftertreatment 1 Supply Air Pressure	Pressure of the supply air for aftertreatment 1.
3515	Aftertreatment 1 Diesel Exhaust Fluid Temperature 2	Temperature of the diesel exhaust fluid at the device measuring diesel exhaust fluid quality.

Continuing next page on SPN # 3516.

SPN	SPN Name	SPN Description
3516	Aftertreatment 1 Diesel Exhaust Fluid Concentration	A measure of the concentration of urea in water.
3563	Engine Intake Manifold #1 Absolute Pressure	The absolute pressure measurement of the air intake manifold.
3606	Engine Controlled Shutdown Request	A signal issued by the engine control system to a user or external system requesting for a controlled shutdown.
3607	Engine Emergency (Immediate) Shutdown Indication	A signal issued by the engine control system to a user or external system indicating that it is immediately shutting the engine down.
3673	Engine Throttle Valve 2 Position	The sensed position feedback of the valve, coming from a second electrical actuator for a second throttle plate, used to regulate the supply of a fluid, usually air or fuel//air mixture.
3822	Engine Exhaust Gas Recirculation 1 Valve 2 Position	The position of the second exhaust gas recirculation valve expressed as a percentage of full travel.
3936	Aftertreatment Diesel Particulate Filter System	Non-specific failures of the aftertreatment diesel particulate filter system.
4090	NOx limits exceeded, root cause unknown	On-Board Diagnostics has determined that the limits for NOx in the exhaust stream have been exceeded, but the root cause cannot be determined by the OBD system.
4094	NOx limits exceeded due to Insufficient Diesel Exhaust Fluid Quality	On-Board Diagnostics has determined that the limits for NOx in the exhaust stream have been exceeded due to an insufficient diesel exhaust fluid quality.
4095	NOx limits exceeded due to Interrupted Diesel Exhaust Fluid Dosing	On-Board Diagnostics has determined that the limits for NOx in the exhaust stream have been exceeded due to an interruption in diesel exhaust fluid dosing activity.
4096	NOx limits exceeded due to Empty Diesel Exhaust Fluid Tank	On-Board Diagnostics has determined that the limits for NOx in the exhaust stream have been exceeded due to the diesel exhaust fluid tank being empty.
4201	Engine Speed 1	The engine speed as measured by speed sensor 1.
4202	Engine Speed 3	The engine speed as measured by speed sensor 3.
4225	NOx limits exceeded due to error in the NOx control system	On-Board Diagnostics has determined that the limits for NOx in the exhaust stream have been exceeded due to an error in the NOx control system.
4301	Aftertreatment 1 Fuel Injector 1 Heater Control	Heating level that the controller is commanding the aftertreatment 1 fuel injector 1 heater control to maintain.
4334	Aftertreatment 1 Diesel Exhaust Fluid Doser Absolute Pressure	The SCR dosing diesel exhaust fluid absolute pressure (measured closest to dosing valve) for aftertreatment system 1 (exhaust bank 1).
4337	Aftertreatment 1 Diesel Exhaust Fluid Dosing Temperature	The diesel exhaust fluid dosing temperature (measured closest to dosing valve) for aftertreatment system 1 (exhaust bank 1).
4341	Aftertreatment 1 Diesel Exhaust Fluid Line Heater 1 Preliminary FMI	Used to identify the applicable J1939-73 FMI detected in the diesel exhaust fluid line heater 1, by the manufacturer's control software in exhaust bank 1.
4343	Aftertreatment 1 Diesel Exhaust Fluid Line Heater 2 Preliminary FMI	Used to identify the applicable J1939-73 FMI detected in the diesel exhaust fluid line heater 2, by the manufacturer's control software in exhaust bank 1.
4345	Aftertreatment 1 Diesel Exhaust Fluid Line Heater 3 Preliminary FMI	Used to identify the applicable J1939-73 FMI detected in the diesel exhaust fluid line heater 3, by the manufacturer's control software in exhaust bank 1.
4347	Aftertreatment 1 Diesel Exhaust Fluid Line Heater 4 Preliminary FMI	Used to identify the applicable J1939-73 FMI detected in the diesel exhaust fluid line heater 4, by the manufacturer's control software in exhaust bank 1.
4374	Aftertreatment 1 Diesel Exhaust Fluid Pump Motor Speed	Rotational speed of the motor driving a pump for diesel exhaust fluid used in an aftertreatment system.

Continuing next page on SPN # 4427.

SPN	SPN Name	SPN Description
4427	Aftertreatment 2 Diesel Exhaust Fluid Tank Temperature	Temperature of the diesel exhaust fluid in the storage tank.
4782	Diesel Particulate Filter 1 Soot Density	Soot density in diesel particulate filter 1.
4809	Aftertreatment 1 Warm Up Diesel Oxidation Catalyst Intake temperature	The temperature measured at the intake of the warm up oxidation catalytic converter in exhaust bank 1.
4810	Aftertreatment 1 Warm Up Diesel Oxidation Catalyst Outlet Temperature	The temperature measured at the outlet of the warm up oxidation catalytic converter in exhaust bank 1.
4814	Engine Coolant Pump command	Command for a coolant pump that can be driven at varying output level.
5264	Engine Exhaust Gas Recirculation 2 (EGR2) Valve Control	Desired percentage of maximum Exhaust Gas Recirculation 2 (EGR2) valve opening. 0% means the valve is closed. 100% means maximum opening (full gas flow).
5265	Engine Exhaust Gas Recirculation 2 (EGR2) Valve 2 Control	Desired percentage of maximum Exhaust Gas Recirculation 2 (EGR2) valve 2 opening. 0% means the valve is closed. 100% means maximum opening (full gas flow).
5285	Engine Charge Air Cooler 1 Efficiency	An indication of the CAC's ability to reduce the temperature of the combustion air that is being routed through the CAC1.
5401	Engine Turbocharger Turbine Bypass Actuator	Diagnostic SPN for the actuator controlling the engine turbocharger turbine bypass valve.
5419	Engine Throttle Actuator 1	Device used to control the flow of air or air/fuel mix to the engine.
5421	Engine Turbocharger Wastegate Actuator 1	Device used to control the turbocharger wastegate.
5435	Aftertreatment 1 Diesel Exhaust Fluid Pump State	State of Aftertreatment 1 Diesel Exhaust Fluid dosing pump.
5485	Aftertreatment 1 Diesel Exhaust Fluid Pump Orifice Flow	The Exhaust Emission Controller aftertreatment reagent pump orifice flow. Could indicate that the flow is being restricted.
5541	Engine Turbocharger 1 Turbine Outlet Pressure	Gage pressure of the combustion by-products exiting the turbine side of the turbocharger 1.
5543	Engine Exhaust Brake Actuator Command	The control command applied to the engine exhaust brake actuator.
5706	Aftertreatment 1 Diesel Exhaust Fluid Pump Heater	Percentage of heating applied to the aftertreatment 1 diesel exhaust fluid pump heater.
5743	Aftertreatment Selective Catalytic Reduction Temperature Sensor Module	Module will take temperature sensor inputs from the Aftertreatment Selective Catalytic Reduction Temperature Sensors and multiplex the sensor values to the engine ECU via the J1939 network.
5745	Aftertreatment 1 Diesel Exhaust Fluid Dosing Unit Heater	Aftertreatment DEF heater internal to the Aftertreatment Dosing Unit.
5841	Diesel Exhaust Fluid Quality Malfunction	The diagnostic system has determined that the engine has been operated with a diesel exhaust fluid (reagent) quality malfunction.
7461	Aftertreatment 1 Diesel Exhaust Fluid Pump 2 Motor Speed	Rotational speed of the motor driving a pump for diesel exhaust fluid used in an aftertreatment system.

End of SPN codes table.

SYSTEM LAYOUT INCLUDING OPTIONS

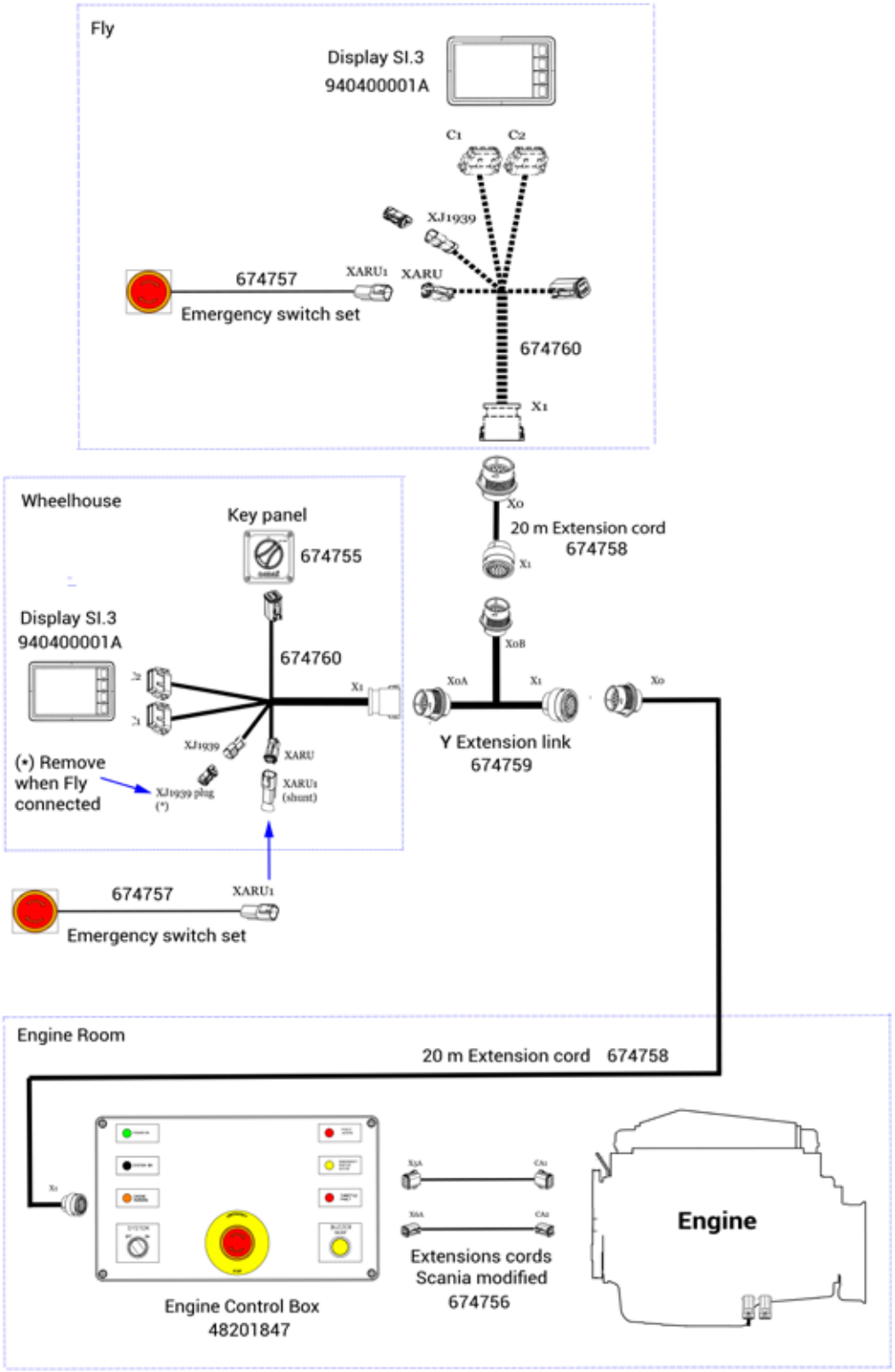

SUMMARY

S06 COMPONENTS 36
SUMMARY 36
ENGINE MAIN COMPONENTS 37
ENGINE VIEWS N13 CR3 38

ENGINE MAIN COMPONENTS

NOTE !

Minor engine details may not be exactly as shown. Some components may not be part of the engine ordered. Not binding pictures.

P/N	COMPONENTS
1	Oil filler
2	Fuel manual pump
3	Bleed nipples on fuel filter (2off)
4	Water separating prefilter for fuel
5	Fuel filter
6	Ventilating valve on the high pressure pump
7	Oil plug
8	Oil dipstick
9	Oil filler in cylinder block
10	Sea water intake
11	Sea water pump
12	Sacrificial anodes (2)
13	Charge air cooler
14	Holes for draining condensation in charge air cooler (on underside)
15	Expansion tank
16	Filling coolant
17	Level glass for checking coolant level
18	Thermostat
19	Oil filter
20	Centrifugal oil cleaner
21	Nipple for draining and filling coolant
22	Heat exchanger
23	Sea water outlet
24	Water cooled exhaust below
25	Coolant pump

ENGINE VIEWS N13 CR3

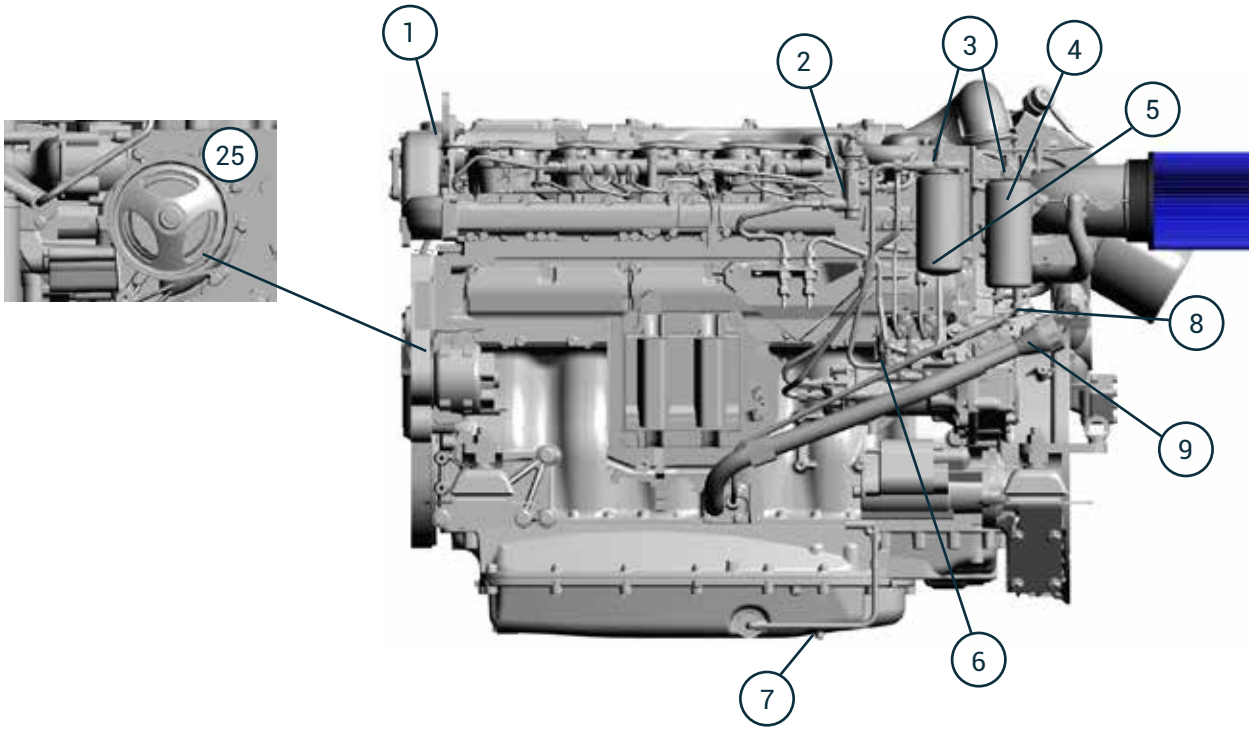

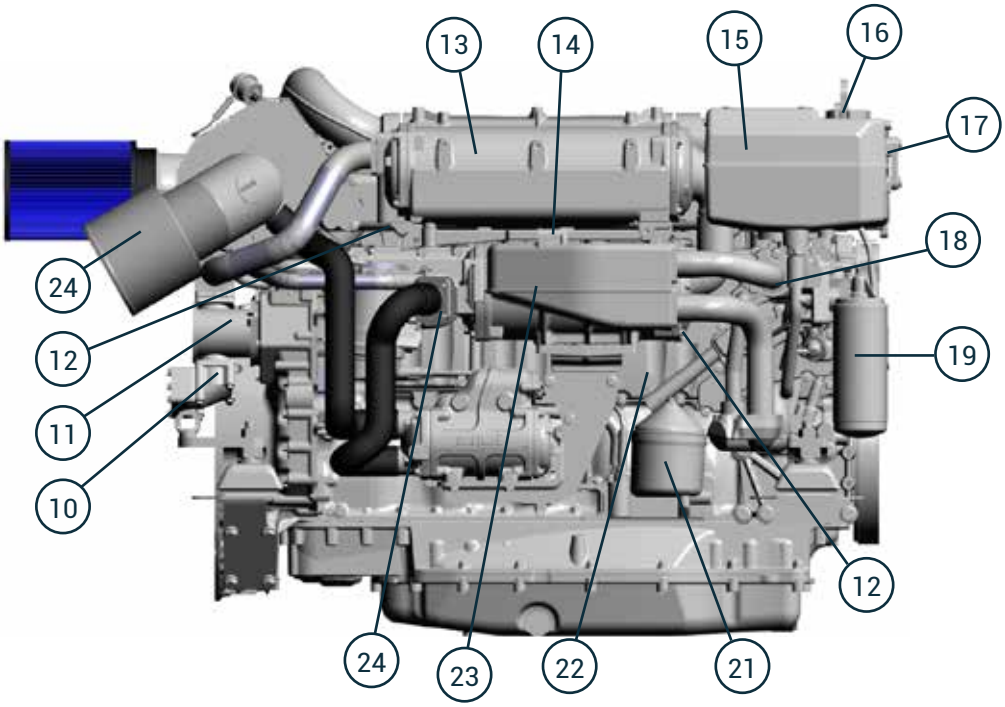

NOTES

S07 STARTING & RUNNING

SUMMARY

S07 STARTING & RUNNING 45
SUMMARY 45
BEFORE STARTING 46
FUEL SYSTEM 46
RAW WATER SYSTEM 46
NEUTRAL SAFEGUARD 46
CHECKS BEFORE STARTING 47
STARTING THE ENGINE 47
COLD WEATHER OPERATION 47
ENGINE START 48
IGNITION AND CRANKING 48
ENGINE STARTED 48
STARTING WITH BOOSTER BATTERIES 48
ENGINE RELUCTANT TO START 49
IDLING ENGINE 49
NORMAL ENGINE OPERATION 49
BREAK IN 50
POWER TAKE OFF 50
REMOTE CONTROL 50
RUNNING 51
BEHAVIOUR OF THE BOAT 51
DURING OPERATION 51
CRUISING SPEED 51
MANOEUVRING 52
TROLLING VALVE 52
AFTER RUNNING 53
STOPPING THE ENGINE 53
AFTER STOPPING THE ENGINE 53
ANCHORING 54
COLD WEATHER PRECAUTIONS 54

BEFORE STARTING

FUEL SYSTEM

The fuel is drawn from the tank by the fuel feed pump and is injected into the combustion chamber by the injection pump. A fuel filter is placed between the feed pump and the injection pump.

The injection pump delivers a larger amount of fuel than required for combustion. The fuel that is not burned is re-injected into the tank through an over-flow pipe.

CAUTION !

The injection pump is an extremely precise unit. Water entry in the fuel system will cause major failure to the injection pump and to the whole fuel system.

A fuel prefilter with a water separator should be installed between the fuel tank and the fuel filter on the engine. The prefilter should be installed as close as possible to the engine fuel filter. It must never be installed on the engine as vibrations affect the water/fuel separation process.

If the fuel tank is located below the engine injection pump, an additional electric fuel feed pump should be installed between the prefilter and the feed pump of the engine.

RAW WATER SYSTEM

The raw water system allows to cool the engine coolant and the exhaust gas.

Raw water is drawn into the heat exchanger by the engine raw water pump. The raw water is drained via the exhaust elbow, where it is mixed with exhaust gases.

The siphon breaker prevents raw water entry into the cylinders via the raw water/exhaust system.

NOTE !

The use of a siphon breaker is mandatory if the exhaust elbow is under the waterline at full load or at less than 200 mm above it. A siphon breaker is mandatory in all Sail Boat and when there's a risk of water entry in the engine.

A raw water filter must be fitted between the raw water intake and the raw water pump of the engine.

NEUTRAL SAFEGUARD

Once wired, the neutral safety switch from the engine control box will display a warning message on the SI-7, SI-9 or other similar control screen if transmission is engaged forward or backward before engine crank:

When this pop up appears, the engine will not start, unless transmission is put to neutral.

CHECKS BEFORE STARTING

WARNING !

Put all the protective covers back before starting the engine.

CAUTION !

Open the sea cock before starting the engine. The raw water pump impeller will be damaged if it runs dry even for few seconds, and may lead to engine overheating.

Perform all of the following operations before starting the engine :

1. Open sea cock. Prime the raw water system if necessary.

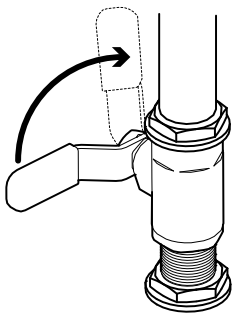

2. Start the compartment fan (if fitted) for at least five minutes. Otherwise, open the hold.
3. Check that there is sufficient fuel.
4. Move the control lever to the neutral position.
5. Open fuel cock, prime the system if necessary.
6. Check the engine and transmission oil level and fill with the recommended oil if necessary.
7. Check the coolant level, top up if necessary.
8. Check the mechanical control cables, lubricate as required.
9. Check there are no fuel, oil, coolant or water leaks.
10. Check the alternator belt.
11. Turn ON the main battery switch.

STARTING THE ENGINE

DANGER !

The propeller can cause serious injury when rotating. Check that nobody is in the water near the propeller before starting. Never use a start spray or any other equivalent product These products are highly flammable.

CAUTION !

Always preheat the engine. Never race the engine while it is cold. Do not crank the engine continuously for more than 10 seconds at a time. Let it cool down for 2 minutes between cranking attempts. Failure to follow these guidelines may result in starter motor burnout.

NOTE !

If the engine does not start after 3 attempts, remove the key and drain the water in the waterlock. Failure to do so may lead to water ingress in the cylinders. When starting the engine for the first time, let it run at idle for several minutes and check for leaks or malfunction.

COLD WEATHER OPERATION

NOTE !

Engines may be equipped with coolant heaters as cold weather starting aids. Engine coolant heaters should be used when temperatures are at or below 0 °C (32 °F).

Turn on the engine coolant heater for a minimum of 2 hours before starting the engine. Additional information on cold weather operation is available from your Nanni engine distributor or authorized servicing dealer.

Synthetic oils improve flow at low temperatures, especially in arctic conditions.

ENGINE START

In the wheelhouse, turn the Key switch to energize the electronic system.

IGNITION AND CRANKING

Press the top right button on the SI-3 and the engine will crank.

Example of engine status display after cranking:

ENGINE STARTED

To insure adequate lubrication, operate engine at or below 1200 rpm with no load for 1-2 minutes. Extend this period to 2–4 minutes at freezing or sub-zero temperatures.

1. Check oil pressure gauge as soon as engine starts. If gauge needle does not level up to minimum oil pressure specification within 5 seconds, stop the engine and determine the cause.
2. Watch coolant temperature gauge. Do not place engine under full load until properly warmed up.

It is a good practice to operate the engine under a lighter load and at lower speeds than normal for the first few minutes after start-up.

STARTING WITH BOOSTER BATTERIES

CAUTION !

Make sure to use batteries with the same rated voltage as the engine's system voltage. On an engine with a two pole electrical system, connect the other end of the jumper cable to the negative pole (-) of the booster battery.

1. Connect the jumper cable to the positive pole (+) of the flat battery, then to the positive pole (+) of the booster battery.
2. Connect the jumper cable to the negative pole (-) of the booster battery. Connect the other end to a bolt of the engine block.

Start the engine following the starting procedure.

3. Let the engine run at idle for few minutes to charge the battery.
4. Stop the engine and remove the cables in the exact reverse order from installation.

ENGINE RELUCTANT TO START

If a water lift (water lock) muffler is installed on the exhaust line, excessive cranking could cause seawater to enter the cylinders and damage the engine. To start engine, reduce starting attempts to three and if not OK, undertake to do this :

1. Close the seacock to avoid filling the muffler with water.
2. Try to start the engine by following the regular starting procedure.
3. When the engine does start, stop the engine immediately and turn off the switch.
4. Re-open the seacock and restart the engine.

IDLING ENGINE

Avoid excessive engine idling as it may cause the coolant temperature to fall below its normal range. This, in turn, causes crankcase oil dilution, due to incomplete fuel combustion, and permits formation of gummy deposits on valves, pistons, and piston rings. It also promotes rapid accumulation of engine sludge and unburned fuel in the exhaust system.

Once an engine is warmed to normal operating temperatures, engine should be idled at slow idle speed. Slow idle speed for engine is set at the factory. If an engine is left idling for more than 5 minutes, stop and restart later.

Above : temperature and pressure on classic gauges.

NORMAL ENGINE OPERATION

Check engine coolant temperature and oil pressure. Temperatures and pressures will vary between engines and with changing operating conditions, temperatures, and IIf coolant temperature rises above the maximum coolant temperature, reduce load on engine. Unless temperature drops quickly, stop engine and determine cause before resuming operation.

Operate the engine under a lighter load and at slower than normal speed for first 15 minutes after start-up. DO NOT run engine at slow idle unless necessary for maneuvering out of dock and harbor.

Stop engine as soon as possible if there are any signs of part failure. Symptoms that may be early signs of engine problems are :

- Sudden drop in oil pressure
- Abnormal coolant temperatures
- High marine gear oil temperature
- Unusual noise or vibration
- Sudden loss of power
- Excessive black exhaust
- Excessive fuel consumption
- Excessive oil consumption
- Fluid leaks

BREAK IN

Operate the engine with care for the first 50 hours of operation.

Do not race the engine while it is cold. Do not operate it at full load except for short periods. Never run the engine at constant engine speed for long periods during the break in period.

Check the oil and coolant level frequently during the running-in period. The oil consumption can be more important during the running in period.

See Maintenance section.

POWER TAKE OFF

Some engines can be fit with a Power Take Off system. This system allows to power accessories like bilge pump, watermaker, etc.

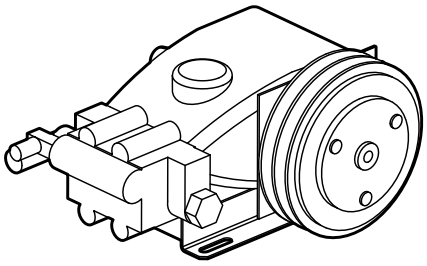

NOTE !

Any mechanical power taken from the engine from a PTO reduces the power delivered to the propeller. The use of a PTO should always be studied and approved by the R&D department of Nanni Industries S.A.S France. Contact your Nanni dealer for more informations.

REMOTE CONTROL

The remote control is an optional extra not in the scope of supply of the engine. The remote control installed on the boat can be different than the ones shown in this document.

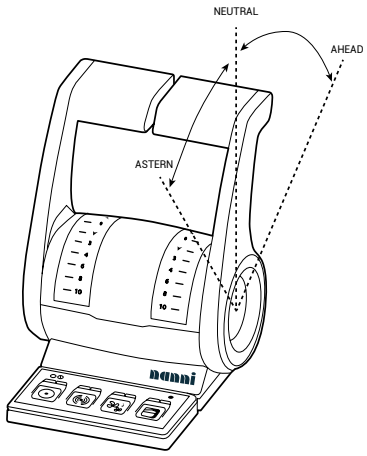

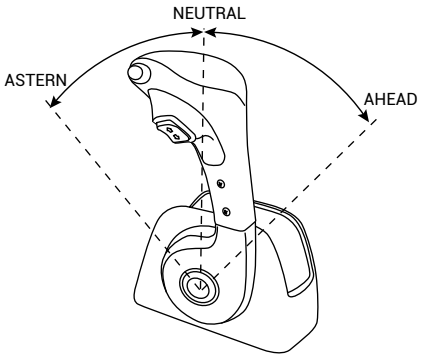

On most boats, the control lever controls both the engine rpm and the gear shift (ahead / astern). However, some boats can be equipped with a separated shift command.

It can also be fitted with a neutral safety switch that prevents the engine from starting until the lever is in neutral position.

Consult the boat builder or your Nanni dealer if you are not sure about the operation of the remote control.

RUNNING

BEHAVIOUR OF THE BOAT

If this is your first boat or if you are not familiar with the boat, we urge you to practice controlling the boat at slow speed as a first step. Avoid violent manoeuvres or unexpected speed changes while sailing. People can fall over or overboard.

Keep also in mind that the weight distribution (passengers, equipments, etc.) inside the boat has an impact on the behaviour of the boat when cruising. Depending the position of the load, the behaviour of the boat may change, particularly in the case of a planning hull.

The condition of the hull and the propeller is also a critical factor. A dirty and / or damaged hull will modify the behaviour of the boat and therefore the engine performance. It can also cause cavitation which can seriously erode the surface of the propeller, the drive, etc.

DURING OPERATION

NOTE !

Never press the START button when the engine is running.

The solenoid of the starter motor would push up the cog and make the starter motor to start, against the turning flywheel of the engine already in motion. This action would destroy the starter motor.

Check the instruments and warning lamps after starting, and regularly when cruising.

CRUISING SPEED

A recommended engine speed is given in the ***TECHNICAL DATA*** section to help you to set your cruising speed.

NOTE !

Always consider sailing conditions and load of the boat to set the cruising speed.

Operating the engine at wide open throttle should be avoided since it is both uncomfortable and uneconomical. Note that operating the engine at a too low rpm for a long period could lead among other things to increased oil consumption.

Deposits may also form in the injection system if the engine do not reach its nominal operating temperature regularly. Run the engine at full throttle regularly in order to burn off any possible deposits in the fuel system.

MANOEUVRING

WARNING !

Shifting at high speed can damage both the engine and the transmission and be dangerous for passengers.

CAUTION !

On a twin engine boat, both engines should be started during reversing manoeuvres to reduce the risk of water ingress in the stationary engine.

Carry out the following operations for forward / reverse manoeuvres :

1. Reduce engine speed to idling and, if possible, let the boat lose most of its speed.
2. Move the control lever to the neutral position and wait a few seconds.

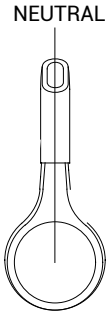

3. Move the control lever into astern. Increase the speed.

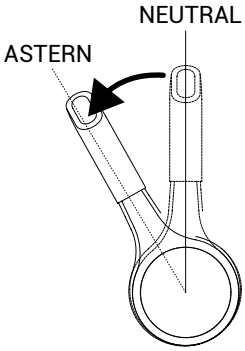

TROLLING VALVE

The Trolling valve system allows to reduce the rotation speed of the propeller below its speed when the engine is at idle. The boat speed is reduced by 30% to 70%.

CAUTION !

The Trolling valve system must never be used for manoeuvring. It also must never be used at an engine speed of more than 1200 rpm (refer to Gear Box operating manual).

AFTER RUNNING

STOPPING THE ENGINE

CAUTION !

Never stop the engine by using the main switch. This could damage the electrical system.

Before stopping the engine, let it run at idle in neutral for few minutes, especially if the engine has been operated at high speed and load. This will allow the coolant to cool down the engine.

1. Start the fan in the engine compartment (if fitted) or open the hold.
2. Turn the key of the starter switch counter-clockwise, the engine stops and all indicators turn off. The engine stops, all lamps go out. For panel without key, press the ON/STOP button and release it. The engine stops. Turn the key of the main panel counter-clockwise. All indicators will turn off.

.

AFTER STOPPING THE ENGINE

CAUTION !

Even after the engine has stopped, some components and fluids will remain hot and under pressure for several minutes. As far as possible, limit works on the engine immediately after stopping it. Allow it to cool down first.

After the engine has stopped :

1. Turn off the main switch.
2. Close the sea cock and the fuel cock.

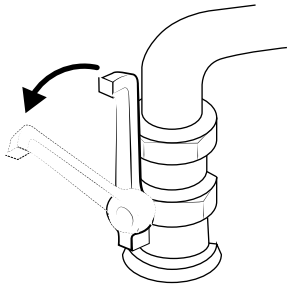

3. Inspect the engine compartment and check for leaks.

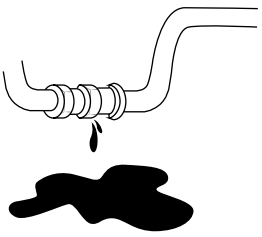

CAUTION !

If the boat is being towed, put the lever in neutral, stop the engine and close the sea cock to prevent the engine from being filled with raw water.

On a twin-engine boat, if cruising with a single engine, close the sea cock of the stopped engine.

Do not forget to open the sea cock before restarting the engine.

ANCHORING

If the boat is not going to be used for some time but is being left in the water, the engine must be run to operating temperature at least once every 2 weeks. This prevents corrosion in the engine.

When the boat is at anchor or in port for an extended period of time, vegetation may develop on the hull, the keel, the drive, the rudder, the propeller, etc. It will significantly affect the behaviour of the boat and the performance of the engine if the vegetation is not removed before the next time the boat is used.

Vegetation and fouling can also obstruct the raw water system and result in damage to the engine by overheating.

Inspect and clean the boat and the raw water system each time the engine is used. Clean if necessary. If the boat is removed out of water, clean the hull and spray a coat of anti-fouling. Never paint the anodes.

Furthermore, when the boat is at anchor or in port for an extended period, water can fill the exhaust system via the exhaust outlet. It is necessary to drain regularly the waterlock when the boat is at anchor.

COLD WEATHER PRECAUTIONS

CAUTION !

Make sure that the engine compartment is not engulfed with frost as among others, a poorly charged battery may burst as a result of freezing.

SUMMARY

S08 MAINTENANCE 55
SUMMARY 55
ABOUT 56
MAINTENANCE 57
TURBOCHARGER 59
TURBO SERVICE 59
CLEANING THE ENGINE 60
EXAUST SYSTEM 60
AIR INTAKE 61
AIR CLEANER 61
READING VACUUM INDICATOR 61
REPLACE THE AIR CLEANER FILTER 62
AND SAFETY CARTRIDGE 62
RENEWING AN AIR FILTER WITH A 62
NON-RENEWABLE ELEMENT 62
FUEL SYSTEM 63
CLEANLINESS REQUIREMENTS 63
DRAINING AND RENEWING AN ENGINE- 65
MOUNTED WATER SEPARATING PREFILTER 65
RENEWING THE COMMUTATIVE WATER SEPARATING PREFILTER (OPTION) 68
BLEEDING THE FUEL SYSTEM 69
LUBRICATION SYSTEM 71
OIL LEVEL - ADDING ENGINE OIL 71
CHANGING THE OIL 72
CLEANING CENTRIFUGAL OIL CLEANER 73
OPERATIONAL TESTING OF THE 75
CENTRIFUGAL OIL CLEANER 75
REPLACE THE OIL FILTER 76
COOLING SYSTEM 76
COOLANT 77
CHECKING COOLANT LEVEL 77
CHECKING COOLANT ANTIFREEZE AND CORROSION PROTECTION 77
CHECKING SACRIFICIAL ANODES 78
CHECKING SEA WATER PUMP IMPELLER 79
CHANGING THE COOLANT AND CLEANING THE COOLING SYSTEM 80
ELECTRICAL SYSTEM 87
WIRES AND CONNECTORS 87
ENGINE COMMAND CONNECTORS 87
BATTERY 88
KEEP CLEAN THE BATTERY 88
DISCONNECT THE STARTER CABLES 88
CONNECT THE CABLES 88
BATTERY ELECTROLYTE LEVEL 88
MISCELLANEOUS 91
CHECKING THE DRIVE BELT 91
CHECKING FOR LEAKS 92
CHECKING AND ADJUSTING THE VALVE CLEARANCE 92

ABOUT

This manual is describing preventive maintenance operations to be carried out by the owner/operator of the engine. This is not a workshop repair manual.

Carrying a set of preventive maintenance operations in accordance with the service intervals will ensure engine optimal reliability and service life.

During the warranty period, it is essential to get any work carried out by a Nanni authorized workshop. Furthermore, any service should be registered in the Nanni after-sale system.

However, some regular checks, particularly those made every time the engine is used, are of the duty of the user. Some operations are explained further on for you to work on the engine in case of an emergency or if there is no repair workshop nearby.

We recommend to have all your works checked by a Nanni authorized workshop.

Repairs and/or adjustment works on the engine by unseasoned marine trained technicians is forbidden for obvious safety reasons. Improper works endangers life, even not at open sea. Operations on valve timing and injection system belong to the exclusive domain of Nanni trained representatives. These may be against EPA or other worldwide environmental regulations.

NOTE !

The service intervals and relevant informations about the preventive maintenance of the transmission are indicated in the user manual provided by the manufacturer of the transmission. Contact your Nanni representative for further information regarding the maintenance of the transmission.

The hourmeter has no reset capability and displays the total operating hours of the engine since factory acceptance tests.

GENERALITIES

WARNING !

Perform maintenance operations having the engine stopped and cold. Get the the starting key out from the panel, put it in your pocket and turn off the power supply.

Read this whole chapter and take all safety precautions before contemplating any maintenance or repair work. Make sure you understand how to perform every operation.

CAUTION !

Clean the engine before any maintenance. Watch for any oil or fluid drop as it is an evidence of a leak somewhere.

CAUTION !

Do not let oil, fuel or grease deposits to build up around the engine as they may increase the risk of fire in the engine compartment.

Moreover, these deposits may hide potential heavy unseen failures.

MAINTENANCE

The maintenance scheddule covers a number of points divided into several sections :

- Lubrication system.
- Air cleaner
- Cooling system
- Fuel system
- Various

WARNING !

Prior to any work onto the engine, the starting motor command must be disabled first. Alternatively, a related electric cable may be removed. Should the engine starts unexpectedly, there is a serious risk of injury.

There is always a risk of sustaining burns when an engine is hot. Particularly hot parts are engine manifolds, turbochargers, oil sumps, as well as hot coolant and oil in pipes and hoses.

IMPORTANT !

Upon delivery, the engine is optimised for the proposed application.

However, regular maintenance is necessary to :

- Prevent unplanned stops
- Extend the service life of the engine
- Maximise the long-term emission performance of the engine
- Provide the best possible operating economy.

MAINTENANCE INTERVALS

The maintenance program includes the following :

- R maintenance : one event when taken into service
- S maintenance : minimum basic maintenance
- M maintenance : more extensive maintenance
- L maintenance : includes nearly all maintenance items in the form
- XL maintenance : includes all maintenance items in the form

During a period, the sequence is S-M-S-L-S-M-S-L-S-M-S-XL

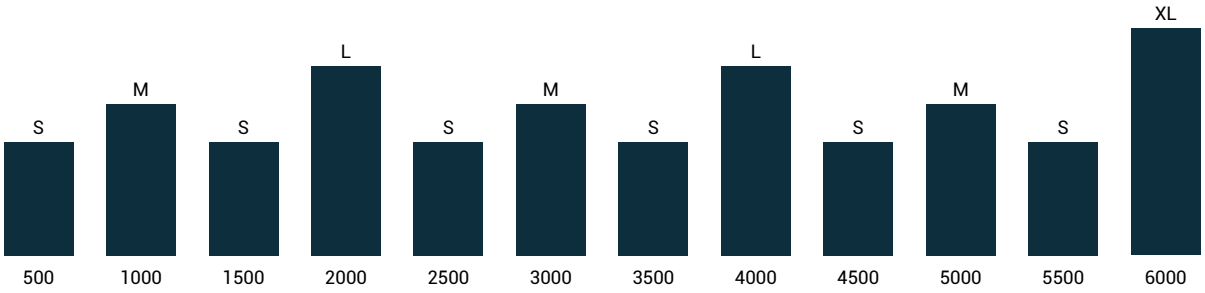

ELEMENT	COMPONENT	Daily	1st time at		Interval (hours)				Minimum	
			1st start	500	500	1000	2000	6000	annual-ly	every 5 years
				R	S	M	L	XL		
Air Cleaner	Reading the vacuum indicator	◊	◊							
	Renewing the filter element			◊	◊	◊	◊	◊	◊	
	Renewing the safety cartridge			◊	◊	◊	◊	◊	◊	
	Renewing an air filter with a non-rewebable element			◊	◊	◊	◊	◊	◊	
Lubrication	Checking the oil level	◊		◊	◊	◊	◊	◊		
	Changing the oil						◊	◊		◊
	Cleaning the centrifugal oil cleaner						◊	◊		◊
	Renewing the oil filter						◊	◊		◊
Cooling system	Checking the coolant level	◊	◊	◊	◊	◊	◊	◊		
	Checking coolant antifreeze and corrosion protect		◊				◊	◊	◊	
	Checking sacrificial anodes			◊	◊	◊	◊	◊	◊	
	Checking the sea water pump impeller			◊	◊	◊	◊	◊	◊	
	Changing the coolant and cleaning the coo-ling system							◊		◊
Fuel system	Checking the fuel level	◊	◊							
	Draining the water separating prefilter	◊		◊	◊	◊	◊	◊		
	Renewing the fuel filters			◊	◊	◊	◊	◊		◊
Miscellaneous	Checking the drive belt		◊			◊	◊	◊	◊	
	Checking for leaks	◊		◊	◊	◊	◊	◊		
	Checking and adjusting the valve clearance			◊			◊	◊		

* Operations to be performed in accordance with user and maintenance manual for your engine. For all technical information specific to your engine, refer to the user and maintenance manual.

TURBOCHARGER

CAUTION !

A turbocharger is an exhaust-driven mechanical device that boost engine power by pumping more air into the engine. A turbocharger uses a pair of fan-like castings mounted on a common shaft. One (called the turbine) is piped to the exhaust, while the other (the compressor) is piped to the engine intake. The flow of exhaust spins the turbine, which causes the compressor to turn. The compressor serves to blow air into the engine at a greater rate than it can pull it in on its own. The greater volume of air can be mixed with a greater volume of fuel, which increases the power output.

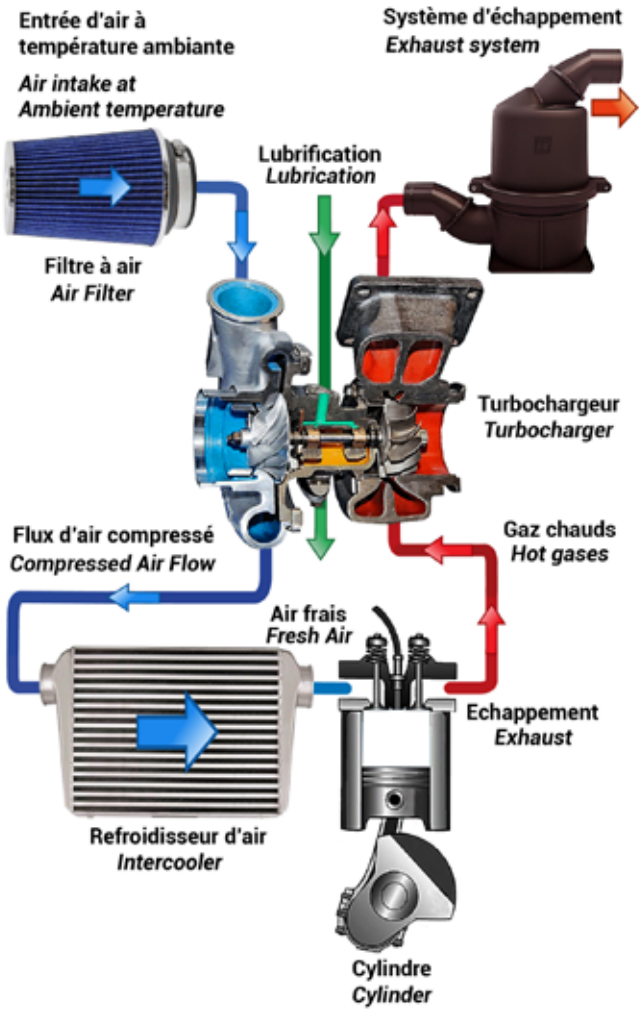

Principle of operation of a turbocharger.

TURBO SERVICE

Engine turbochargers are designed to provide long years of trouble free service, which if required, can only be performed by a specialized workshop. In view to maintain turbochargers performances for as long as possible, some basic rules must be followed.

Changing or cleaning the air filters on a regular basis is a good way to keep debris from causing problems with the intake side of turbochargers.

A turbocharged engine will definitely need more oil changes than an ordinary atmospheric one, as the turbines axle requires excellent lubrication. For this reason, oil characteristics must be followed closely. Never use low grade bargain lubrication oil.

Turbochargers get very hot when engine is running and a protective metal shield or thermal sleeve is always affixed onto the exhaust side to prevent burns. Never remove these shields.

Do not get confused : a turbocharger is driven by exhaust gases. On a supercharger, the air intake turbine is driven by a belt. In addition to a rotation speed far lower compared to a turbocharger, an amount of output power is subtracted fom the engine because of the drive system.

There is no serviceable part for the end user inside turbochargers. Any attempt to disassembling would lead to a total failure.

CLEANING THE ENGINE

CAUTION !

Beware of hot washing water. Wear eye protection, protective clothes and protective gloves.

Clean the engine before maintenance. Wipe away sludge.

Clean only the engine with spayed hot water if it can be drained through a dedicated port.

Use a degreasing agent, if necessary.
Take care not to spray or pour any water inside the dashed line below :

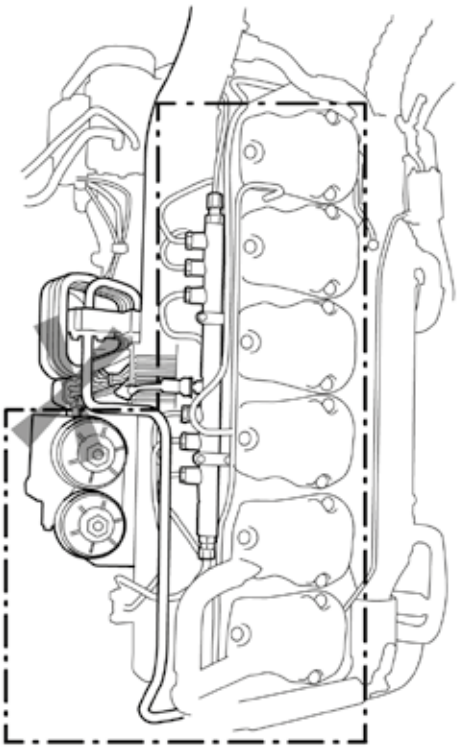

Clean within the area marked b the line

EXAUST SYSTEM

The exhaust system of an engine must be able to freely exhaust all exhaust gases at high temperatures after combustion in the outside air.

The exhaust resistance should be as low as possible to avoid a decrease in power, however the exhaust noise should be kept to an acceptable level. Careful design is necessary to reconcile these two contradictory factors.

Exhaust manifold exhaust may be either introduced directly into the silencer or conveyed to a location that will not interfere with the operator through the exhaust pipe. The goal is, in all cases, to reduce the back pressure.

Inspect the exhaust system as a whole (hoses, hose clamps, mixing elbow, manifold, etc.). Look for cracks, leaks and rust. Tighten or change if necessary.

Check that there are no carbon deposits or soot on the exhaust components as this is a decisive sign of an exhaust leak.

If any fault appears on any part of the exhaust system, replace it as there is a risk of leakage from the exhaust or water entering the engine.

When disassembling the exhaust system, replace the seal (s).

AIR INTAKE

WARNING !

Carry out these operations when the engine is stopped and cold. Make sure that no dust or dirt enter the intake manifold.

The reliability and the performances of the engine depend among other things on the quantity and the temperature of the global air intake design.

AIR CLEANER

WARNING !

Never start the engine without the air filter in position. Without the air filter, there is a risk of dirt being sucked into the engine.

The engine turbocharger will continue to rotate and take in air for a time, even after the engine has stopped. Therefore, wait for a few minutes before opening the air cleaner.

NOTE !

Renew the filter element earlier than the maintenance interval if the vacuum indicator shows red.

The filter element must not be cleaned in water or be blown clean with compressed air. There is always a risk that the filter element will be damaged when it is cleaned.

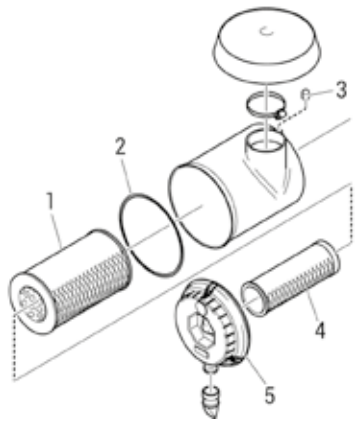

Air cleaner with safety cartridge.
1. Filter element.
2. O-ring.
3. Vacuum indicator.
4. Safety cartridge.
5. Cover.

READING VACUUM INDICATOR

If the vacuum indicator's red plunger is fully visible, renew the air cleaner filter element in accordance with the following section.

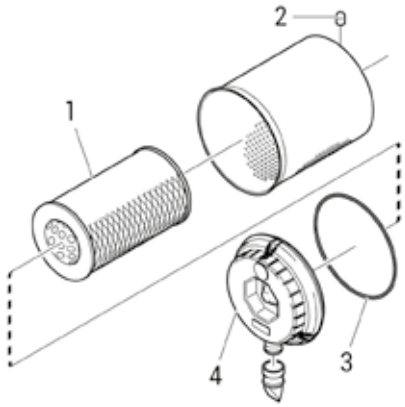

Air cleaner without safety cartridge.
1. Filter element.
2. Vacuum indicator.
3. O-ring.
4. Cover.

REPLACE THE AIR CLEANER FILTER AND SAFETY CARTRIDGE

Special tool

Number	Description	Illustration
970317077	Kit air filter cleaner EN, ESP, SUOMI	
970317078	Kit Air filter cleaner FR, IT, DEU	

1. Remove the cover from the air cleaner.
2. Renew the filter element.
3. If the air cleaner has a safety cartridg e: Remove the safety cartridge and fit a new one.
4. Insert a torch into the filter element and check that the filter paper is free of holes and cracks.
5. Renew the O-ring if it is damaged or hard.
6. Assemble the air cleaner.
7. Ensure that the O-ring is not outside the edges.
8. Reset the vacuum indicator by pressing in the button marked in the illustration.

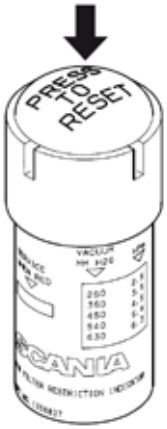

RENEWING AN AIR FILTER WITH A NON-RENEWABLE ELEMENT

IMPORTANT !

If the engine has an air filter with a non-renewable Nanni element, it should be renewed instead of cleaned.

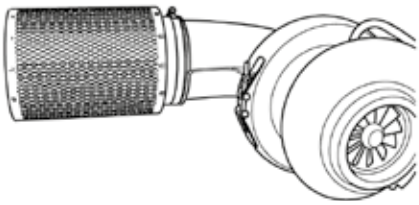

Air filter with a non-renewable element.

FUEL SYSTEM

DANGER !

Stop the engine and let it cool down before refuelling or carrying out any operation on the fuel system.

CAUTION !

Fuel is flammable and can be dangerous. Fuel spilled on hot surfaces or near sparks can ignite. Do not step onto the injection pipings. Take care to always keep them in good condition.

WARNING !

Total cleanliness must be guaranteed when working on the fuel system. No impurities should enter the injection system. Make sure not to spill fuel on nearby hoses.

The fuel feed pump is an extremely precise unit. Water entry in the fuel system will cause major failure to the injection pump and to the whole fuel system.

NOTE !

Any work on the fuel injection system must be carried out by a authorized Nanni technician.

Check regularly the condition of the components of the fuel system (hoses, filter, clamps, etc). When a clamp is removed, replace it by a new one, always in stainless steel.

CLEANLINESS REQUIREMENTS

IMPORTANT !

The whole fuel system is very sensitive to dirt and even very small particles. Foreign particles in the system can cause serious malfunctions. It is therefore very important that everything is as clean as possible when work is carried out on the fuel system. Before repair work, the engine must be washed. If possible, a hot water wash should be used.

It is strictly forbidden to carry out any machining work or work with compressed air near an open fuel system.
Be extra careful and always use clean, lint-free and dust-free clothes and disposable gloves when working on the fuel system.

Clean tools before they are used and do not use any worn or chrome-plated tools. Material and flakes of chrome may come off.
Clean connections and the surrounding area before removal. When cleaning, cloths or paper which shed fibres must not be used.

Plug or cover the connections during removal. Also clean the connections before the components are fitted. Place removed components on a thoroughly cleaned, dust-free surface.

CHECKING FUEL LEVEL

Check the fuel level and top up with fuel as necessary.

NOTE !

If the fuel tank has been run dry or if the engine has not been used for a long time, bleed the fuel system. See the section Bleeding the fuel system.

RENEWING THE FUEL FILTER

1. Clean the exterior of the fuel filter with a damp cloth.
2. Unscrew the filter.
3. Apply oil to the gasket on the new filter.
4. Screw the filter into place by hand until it makes contact.
5. Screw a further half turn by hand.
6. Bleed the fuelsystem according to the instructions in the Bleeding the fuel system chapter.

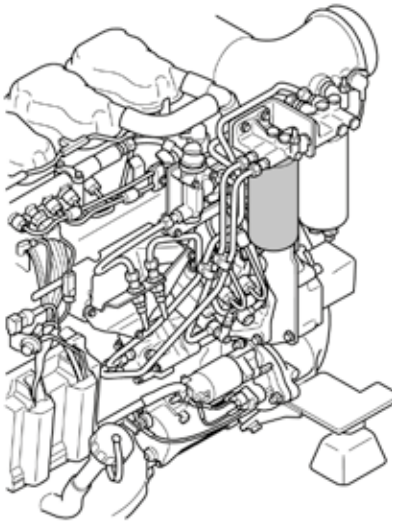

Fuel filter location

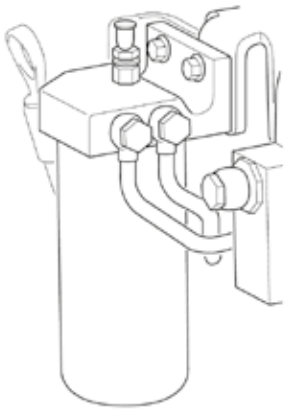

Fuel filter

DRAINING AND RENEWING AN ENGINE-MOUNTED WATER SEPARATING PREFILTER

IMPORTANT !

The sensor cable is sensitive. Handle it carefully.

1. Close the shut-off cock in the fuel pipe and position a container under the filter
2. Detach the sensor cables from the contact housings on the filters.
3. Open the filter drain plugs and allows the fluid to run down into the container.
4. Unscrew the filters (3) from the filter head (4).

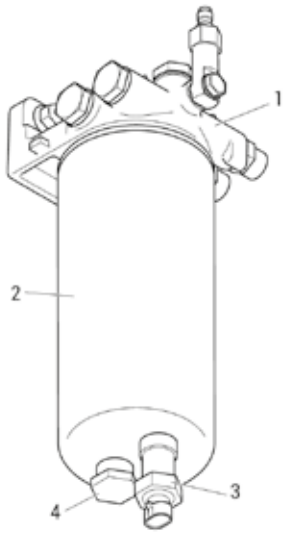

1. Filter head.
2. Filter.
3. Contact housing.
4. Drain plugs.

5. Discard the old filters and use new ones.
6. Lubricate the O-rings on the filters with engine oil.
7. Fill the width of the filters with clean fuel.
8. Screw the filters into position until the O-rings rest against the filter head.
9. Tighten the filters by hand a further half-turn.
10. Open the shut-off cock in the fuel pipe and check that the fuel system is sealed.
11. Connect the sensor cable to the contact housings on the filters.
12. Bleed the fuel system according to the instructions in the Bleeding the fuel system chapter.

DRAINING AND RENEWING THE SINGLE WATER SEPARATING PREFILTER (OPTION)

IMPORTANT !

The sensor cable is sensitive. Handle it carefully.

Use a suitable container. The fuel collected must be disposed of as specified in national and international laws and regulations.

Before starting work: Close the shut-off cock in the fuel pipe and position a container under the filter.

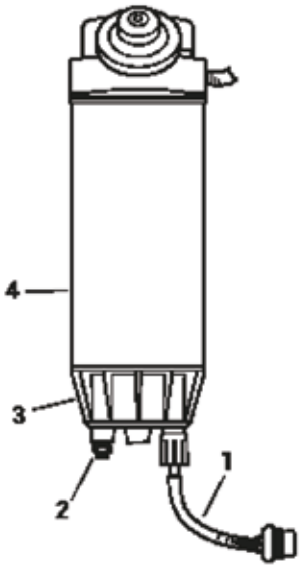

1. Sensor cable.
2. Drain tap.
3. Filter cover.
4. Filter.

1. Undo the sensor cable from the connector on the filter bracket.
2. Open the drain tap in the filter cover and let the fluid run down into the container.
3. Unscrew the filter cover.
4. Unscrew the filter from the filter head.
5. Discard the old filter and use a new filter.
6. Lubricate the O-ring in the filter cover with engine oil.
7. Screw the filter cover onto the new filter by hand. Make sure that the drain tap is fully closed.
8. Lubricate the O-ring on the filter with engine oil.
9. Fill the width of the filter with clean fuel.
10. Screw the filter into position until the O-ring rests against the filter head. Tighten the filter another 1/2 to 3/4 turn by hand.
11. Open the shut-off cock in the fuel pipe and check that the fuel system is sealed.
12. Screw the sensor cable in the contact housing onto the filter bracket.
13. Bleed the fuel system according to the instructions in the Bleeding the fuel system section.

DRAINING THE COMMUTATIVE WATER SEPARATING PREFILTER (OPTION)

During operation, the arrow on the rotary control should point towards the filter being used.

Use a suitable container. The fuel collected must be disposed of as specified in national and international laws and regulations.

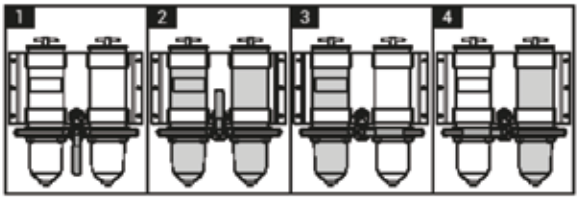

1. Closed; neither filter is active.
2. Both filters are active.
3. Left-hand filter is active.
4. Right-hand filter is active.

1. Switch off the filter that needs renewing. The arrow on the rotary control points towards the filter in operation.

WARNING !

Be careful that the valve does not pass the closed position when the engine is in operation. A closed position can result in the engine stopping.

2. Remove the cover from the filter housing.

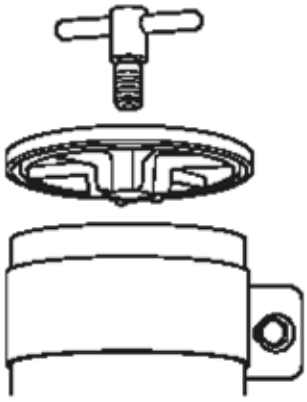

3. Undo the drain plug.
4. Tighten the drain plug when all the water has emptied.

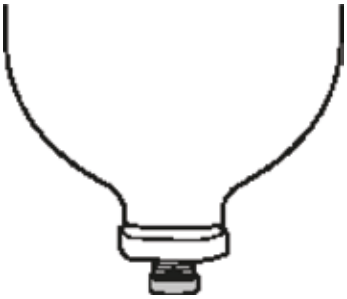

5. Fill the filter housing with clean fuel.
6. Fit the cover. Tighten the cover screw by hand.

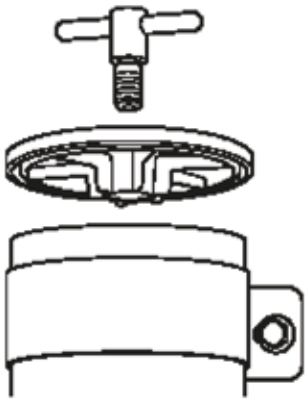

RENEWING THE COMMUTATIVE WATER SEPARATING PREFILTER (OPTION)

During operation, the arrow on the rotary control should point towards the filter being used.

Use a suitable container. The fuel collected must be disposed of as specified in national and international laws and regulations.

1. Switch off the filter that needs renewing. During renewal, the arrow on the rotary control points towards the filter in operation.

WARNING !

Be careful that the valve does not pass the closed position when the engine is in operation. A closed position can result in the engine stopping.

2. Clean the filter housing externally with a cloth.
3. Remove the cover from the filter housing.

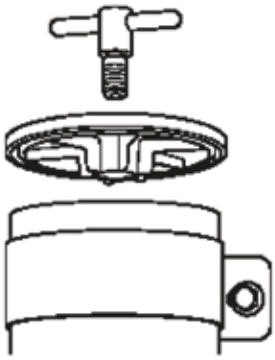

4. Remove the filter and fit the new filter.

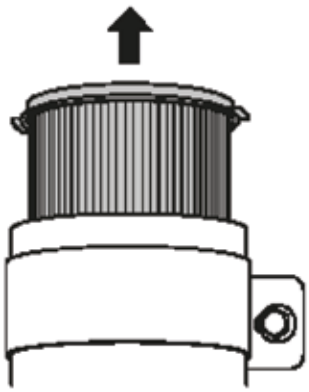

5. Renew the O-rings in the cover.
6. Lubricate the O-rings with engine oil.

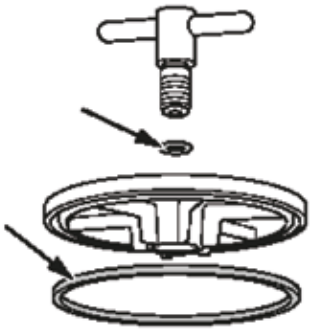

7. Fill the filter housing with clean fuel.
8. Fit the cover. Tighten the cover screw by hand.

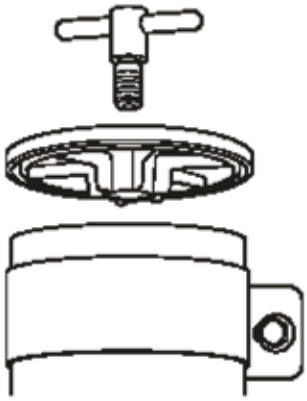

BLEEDING THE FUEL SYSTEM

BLEEDING THE FUEL SYSTEM USING A SUCTION TOOL

Tool

Description	Illustration
Suction tool for fuel system	

NOTE !

Nanni recommends bleeding the fuel system using suction tools rather than with a hand pump. This is a quicker and simpler method, which ensures a complete bleeding.

1. Open the ventilating valve on the high pressure pump and connect the suction tool to it. See illustration. Start by wiping off the ventilating valve.
2. Hold the suction tool straight and draw out at least a full container of fuel.
3. Once the fuel coming out of the hose is free of air bubbles, then bleeding is complete.
4. Close the ventilating valve on the high pressure pump. Remove the hose and suction tool.
5. Start the engine and check that no leakage occurs.

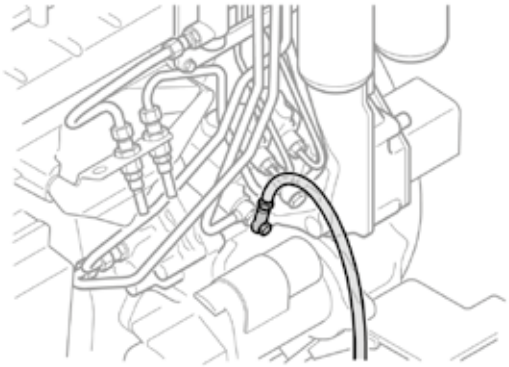

BLEEDING THE FUEL SYSTEM USING A HAND PUMP

Tightening torques	
Ventilating valves	9 Nm (7 lb-ft)

1. Unscrew the hand pump handle.

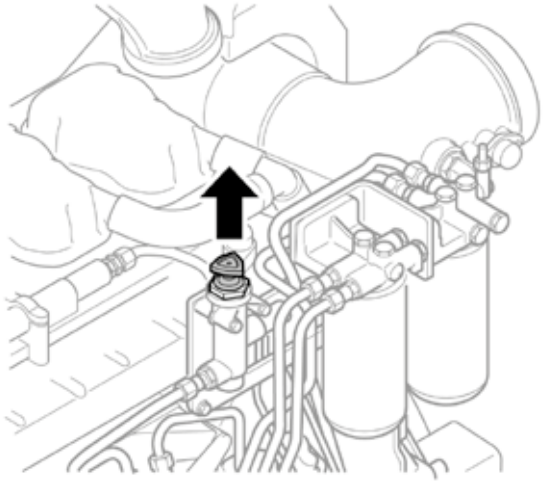

2. Attach a clear plastic hose to the ventilating valva on the prefilter
3. Place the other end of the plastic hose in a container that holds at least 5 litres (1.3 US gallons).
4. Open the ventilating valve.
5. Pump with the hand pump until fuel without air bubbles comes out.
6. Close the ventilating valve.

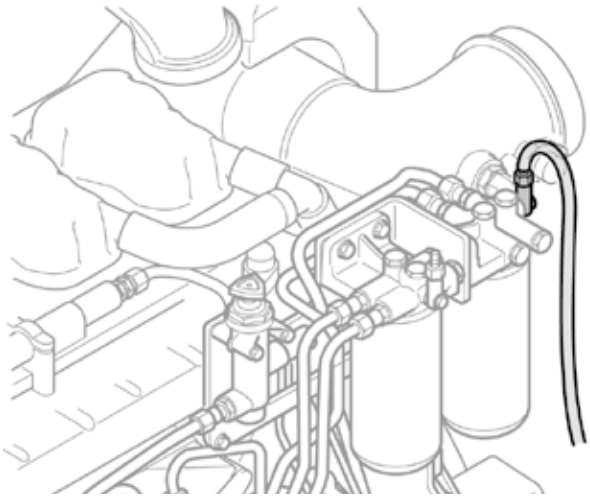

7. Connect the plastic hose to the ventilating valve on the main filter.

8. Open the ventilating valve.
9. Pump with the hand pump until fuel without air bubbles comes out.
10. Close the ventilating valve.

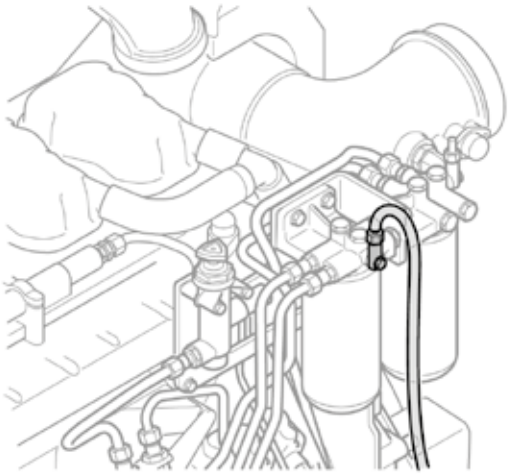

11. Connect the plastic hose to the ventilatig valve in the high pressure pump.
12. Open the ventilating valve.
13. Pump with the hand pump until fuel without air bubbles comes out of the plastic hose. It will take atound 150 pump strokes.

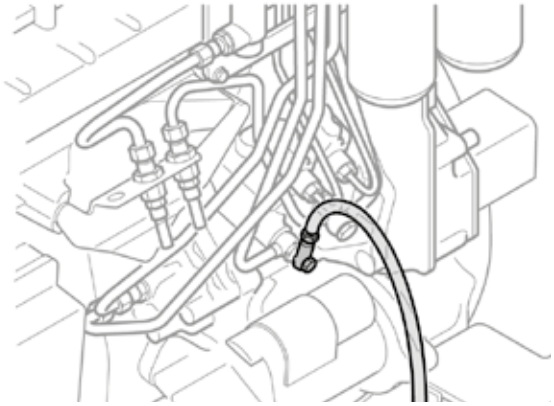

14. Close the ventilating valve and screw the hand pump handle downwards.
15. Start the engine The engine should be easy to start.

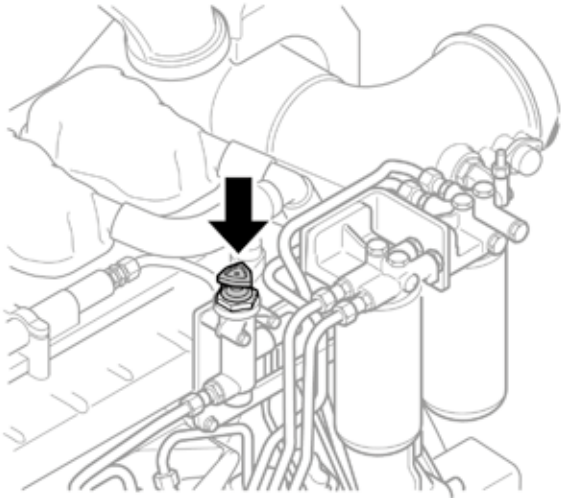

LUBRICATION SYSTEM

CAUTION !

Never over-fill the engine oil crankcase.

NOTE !

With a new or reconditioned engine, oil and oil filters must be replaced after 20 hours of operation. Use oil grades as indicated in the ***SPECIFICATIONS*** Section (end of manual).

Warranty claims may be rejected if unsuitable oil grade has been used. The viscosity may be adapted depending the climatic conditions ; refer to the Fluids Section for more informations.

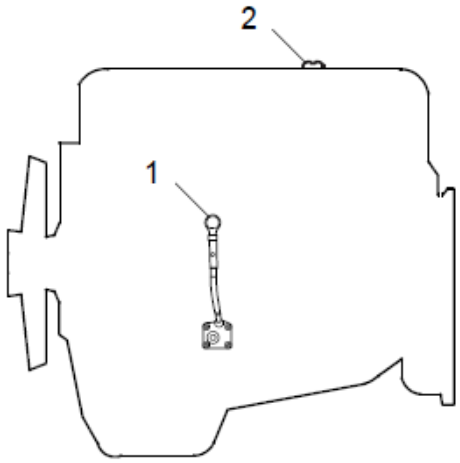

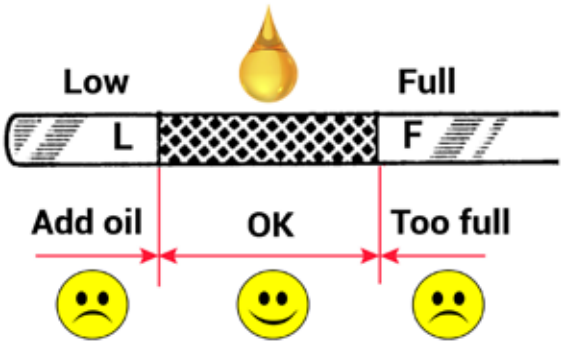

OIL LEVEL - ADDING ENGINE OIL

Check the engine and transmission oil level before starting the engine. The oil level should be within the range indicated on the dipstick, between the Mini and Maxi level.

HOW TO CHECK THE OIL LEVEL:

1. Pull off and wipe the dipstick (1).
2. Re-insert and remove the dipstick.
3. Check that the oil level is between the Mini and Maxi marks.
4. If the level is too low, remove the oil filler cap (2) and add some oil slowly at a time. Wait a few minutes before checking the oil level to allow the oil to get down to the oil pan.

NOTE !

To top up oil level, use the same oil which is in the engine. Do not mix different types of oil.

CHANGING THE OIL

WARNING !

Hot oil can cause burns and skin irritation. Wear protective gloves and eye protection when changing hot oil. Make sure that there is no pressure in the lubrication system before changing the oil. The oil filler cap must always be in place when starting and running the engine to prevent oil being ejected.

NOTE !

Change oil more often if the engine is subjected to particularly demanding operation, such as a dusty environment, or if deposits on the paper in the centrifugal oil cleaner are thicker than 28 mm (1.1 in).

Renew the oil filter and clean the centrifugal oil cleaner when changing oil.

Principle of operation :

1. Unscrew the oil plug and drain the oil when the engine is hot. On some engine types the oil is pumped out by means of a bilge pump. If the engine is drained via the valve, the oil should be hot. Alternatively, use a pump. This so that draining occurs more quickly.
2. Wipe off the magnet on the oil plug.
3. Renew the gasket on the oil plug.
4. Refit the oil plug.
5. Fill with the amount of oil specified for the oil sump.
6. Wait at least 7 minutes.
7. Check the level on the oil dipstick.

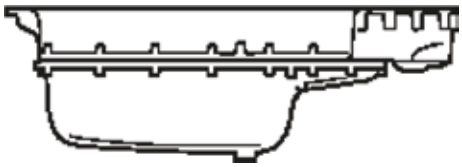

Max. 45 litres (11.9 US gallons).
Min. 39 litres (10.3 US gallons).

Max. 36 litres (9.5 US gallons).
Min. 30 litres (7.9 US gallons).

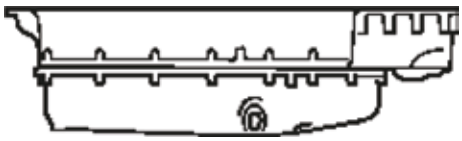

Max. 34 litres (9.0 US gallons)
Min. 28 litres (7.4 US gallons)

CLEANING CENTRIFUGAL OIL CLEANER

WARNING !

The oil may be hot. Carefully remove the cover from the centrifugal oil cleaner.
Use eye protection and protective gloves when working on the centrifugal oil cleaner.

When the centrifugal oil cleaner is cleaned, there should be some dirt deposits on the paper in the rotor cover. If the paper is clean, the equipment is not working as it should. If this is the case, investigate the cause of this.

Renew the paper more frequently if the dirt deposits are thicker than 28 mm (1.1 inches) during a scheduled oil change.

1. Clean the cover.
2. Unscrew the nut securing the outer cover.
3. Let the oil run out from the rotor.
4. Lift out the rotor. Wipe off the outside.
5. Undo the rotor nut and unscrew it about 1.5 turns.

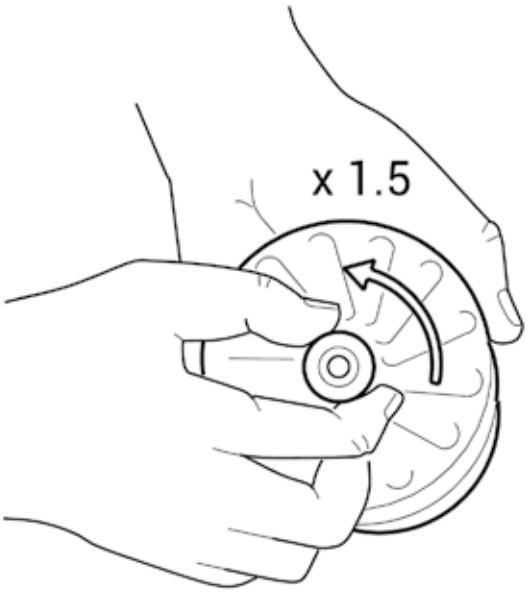

NOTE !

Take care not to damage the rotor shaft.

6. If the rotor nut is jammed: Turn the rotor upside down and fasten the rotor nut in a vice. See illustration.

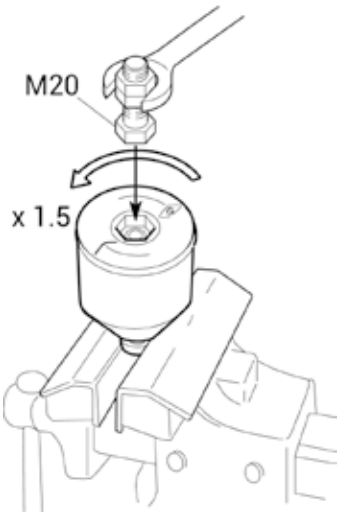

7. Use protective jaws so as not to damage the grooves of the rotor nut.
8. Turn the rotor 1.5 turns anti-clockwise.
9. If this does not work: Screw two nuts together with an M20 screw.
10. Position the screw head at the bottom of the rotor.
11. Position a ring spanner on the lower nut and turn the rotor 1.5 turns anti-clockwise.

IMPORTANT !

Do not attach the rotor directly to the vice. Never strike the rotor cover.

12. Remove the rotor cover by holding the rotor in both hands and tapping the rotor nut against the table. Never strike the rotor directly as this may damage its bearings.
13. Remove the strainer from the rotor cover. If the strainer is stuck, insert a screwdriver between the rotor cover and strainer and carefully prise them apart.

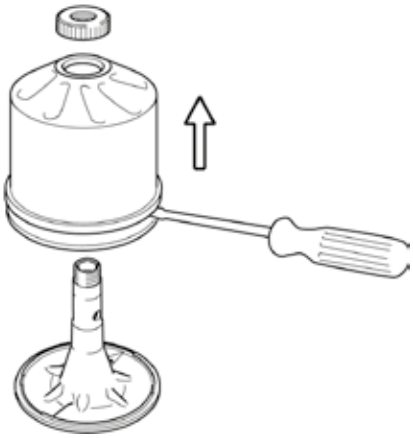

14. Remove the paper insert.
15. Scrape off any remaining dirt deposits from the inside of the rotor cover. If the deposits on the paper are thicker than 28 mm (1.1 in), the centrifugal oil cleaner must be cleaned more often.

16. Wash the parts according to the applicable industrial method.
17. Inspect the 2 nozzles on the rotor. Ensure that they are not blocked or damaged. Renew any damaged nozzles.
18. Check that the bearings are undamaged. Renew damaged bearings.

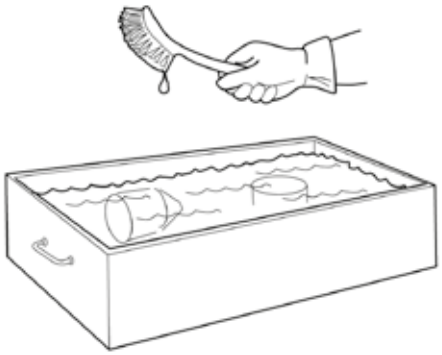

19. Fold and fit a new paper insert (an old marine map would do very well) on the inside of the rotor cover as illustrated.

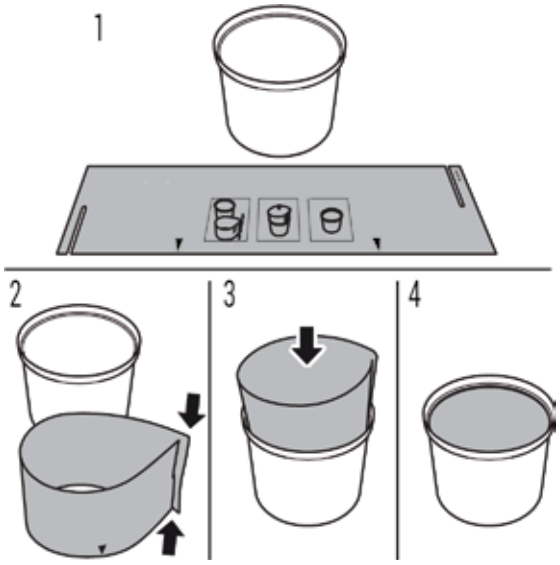

20. Fit the strainer onto the rotor.
21. Fit a new O-ring to the foot of the centrifugal oil cleaner.
22. Refit the rotor cover. Ensure that the O-ring is not outside the edges, but is in the groove.
23. Screw the rotor nut back on by hand.
24. Check that the shaft is not damaged or loose. Contact a Nanni representative if the rotor shaft needs renewing.

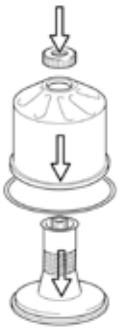

NOTE !

Take care not to damage the rotor shaft.

25. Refit the rotor and rotate it by hand to make sure it rotates easily.

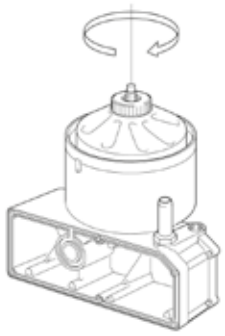

26. Fit a new O-ring in the cover.
27. Refit the cover and tighten the lock nut. Tightening torque 20 Nm (15 lb-ft).

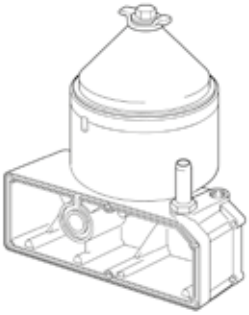

IMPORTANT !

To reduce the risk of oil leakage it is important to tighten the cover to the correct tightening torque.

OPERATIONAL TESTING OF THE CENTRIFUGAL OIL CLEANER

Operational testing need only be carried out if it is suspected that the centrifugal oil cleaner is malfunctioning. For example, if there are unusually few deposits given the distance driven.

1. Run the engine until it reaches normal operating temperature.
2. Turn off the engine and listen for the sound from the rotor. It should continue rotating for a time, even when the engine has stopped.
3. Use your hand to feel if the filter housing is vibrating.
4. If the filter housing is not vibrating, dismantle and check the centrifugal oil cleaner.

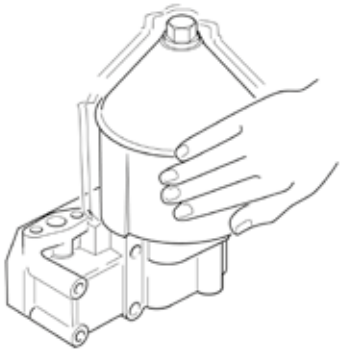

REPLACE THE OIL FILTER

Clean the centrifugal oil cleaner at the same time as you change the oil filter. Otherwise, the oil filter will be blocked and resistance in the filter will increase. If this happens, an overflow valve in the filter retainer opens and lets the oil pass without being filtered.

1. Remove the old filter.
2. Oil the rubber gasket on the new filter.
3. Tighten the filter by hand. Never use tools because the filter could sustain damage, obstructing circulation.
4. Start the engine and check for leaks.

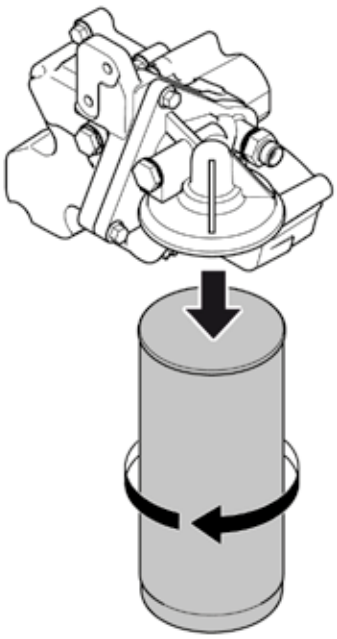

COOLING SYSTEM

CAUTION !

Instead of proper mix coolant, raw clean water can only be used in case of emergency and for the shortest time possible. As soon as back to shore, get in touch with the nearest Nanni representative or seasoned marine shipyard or workshop. Please refer to the Fluids section for complete information.

CAUTION !

- **Always use coolant made of 50% antifreeze with anticorrosion additive and 50% of clean water. The antifreeze protects the engine against internal corrosion.**
- **This mix must be used all year around, even if there is no risk of frost.**
- **Never use water alone to completely fill the coolant system. Please refer to the Fluids section for complete information.**

COOLANT

WATER & ANTI-FREEZE

Please refer to the Fluids section for complete information.

WATER BOILER

A water boiler can be connected to the engine coolant circuit. If the boiler is located above the engine, an additional recovery tank must be installed above the boiler.

Ducts to the boiler must be in accordance with high temperature and high pressure. Never attempt to use flexible hoses supplied from a hardware store.

A specific boiler kit is available from Nanni Industries. Please contact your nearest Nanni representative for more information.

The amount of coolant must be adapted depending the model of water boiler to completely fill the coolant system.

COOLANT EXPANSION

When the engine is running, the internal temperature is high ; as a result, the coolant liquid expands its volume. The heat exchanger is designed to accomodate this normal and physical expansion.

Make sure not to overfill the heat exchanger when filling with coolant.

CHECKING COOLANT LEVEL

DANGER !

Never open the coolant filling cap or any plug of the cooling system when the engine is operating or still warm. Steam or hot fluid can spray out. Prevent potential injuries ! Use protective gloves as coolant can cause irritation if it comes in contact with the skin.

IMPORTANT !

It is not permissible to top up large amounts of coolant via the expansion tank. Filling via the expansion tank leads to air locks in the cooling system which can lead to e.g. cavitation damage to the coolant pump shaft seal. If a large amount of coolant needs to be added, follow the instructions in the section Filling coolant.

The following instructions apply to Nanni expansion tanks. For other types of expansion tanks, follow the manufacturer's instructions.

1. Check the coolant level through the sight glass on the expansion tank.
2. Top up with coolant as necessary.

CHECKING COOLANT ANTIFREEZE AND CORROSION PROTECTION

Tools

Description	Illustration
Refractometer	

WARNING !

Avoid skin contact with coolant as this may cause irritation to the skin. Wear protective goggles and gloves when handling coolant.

IMPORTANT !

Use only pure fresh water that is free from particles, sludge and other impurities.

1. For a small amount of coolant into a container and check that the coolant is pure and clear.
2. Change the coolant if it is contaminated or cloudy.
3. Measure the antifreeze and corrosion inhibitor content with the refractometer.

The following rules apply to ethylene glycolbased coolant :

- The antifreeze and corrosion inhibitor content must be minimum 35 percent by volume for corrosion protection to be sufficient.
- An antifreeze and corrosion inhibitor content greater than 55 percent by volume impairs the ability to protect against frost.
- If ice forms in the coolant, there are disruptions initially, but there is no immediate risk of damage. The engine should not be subjected to heavy loads when ice starts to form.

CHECKING SACRIFICIAL ANODES

IMPORTANT !

Corrosion of sacrificial anodes depends on the operating environment. Therefore, check the sacrificial anodes every third month during the first year of commissioning or when changing the operating environment.

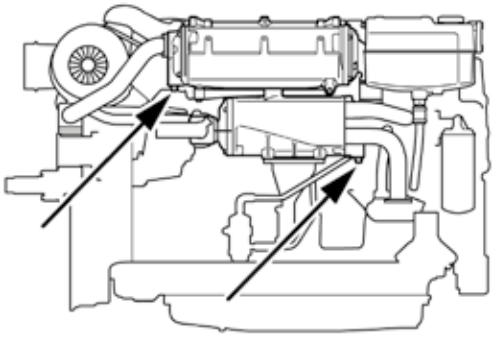

Position of sacrificial anodes.

1. Drain the sea water circuit as described in the Draining the sea water.
2. Remove all sacrificial anodes.
3. Check all sacrificial anodes:
   * Scrape off all loose material and check the corrosion.
   * Renew all sacrificial anodes if there is less than ¾ (2) remaining of any of the sacrificial anodes.

1. New sacrificial anode.
2. Approx. 3/4 remains.
3. Approx. 1/4 remains.

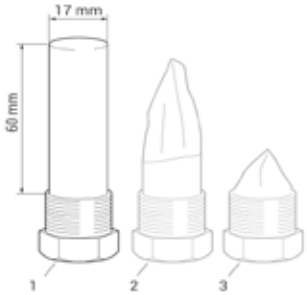

   * If the sacrificial anodes are very corroded (3), the length of the intervals for checking the sacrificial anodes should be halved. If the sacrificial anodes are very corroded, they often come loose entirely.
4. Renew the gasket when fitting.

CHECKING SEA WATER PUMP IMPELLER

1. Drain the sea water circuit as described in the Draining the sea water circuit.
2. Remove the sea water pump cover. See illustration.

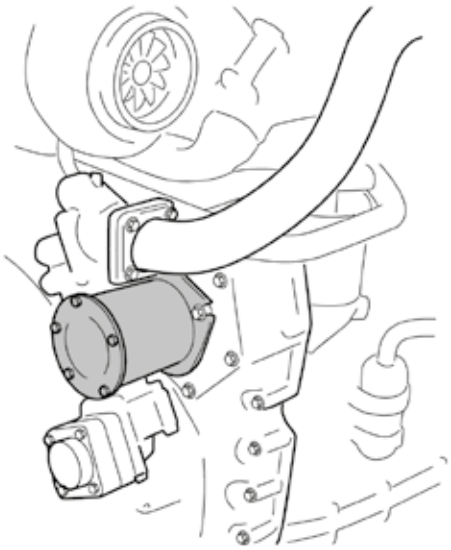

3. Check that the vanes of the impeller are not heavily splintered or damaged.

RENEWING THE SEA WATER PUMP IMPELLER

Special tool

Number	Description	Illustration
965400001	Puller	

NOTE !

If the impeller must be renewed frequently, the cleaning of the sea water needs to be improved.

There should be a spare impeller and puller on board.

The impeller can be deformed during extended periods of inactivity. Renew the impeller before starting or remove the impeller before longer periods of stoppage.

1. Pull out the impeller using the puller. Note the direction of rotation of the impeller vanes.
2. Fit a new impeller and cap. Check that the cap seal is not hard or damaged.

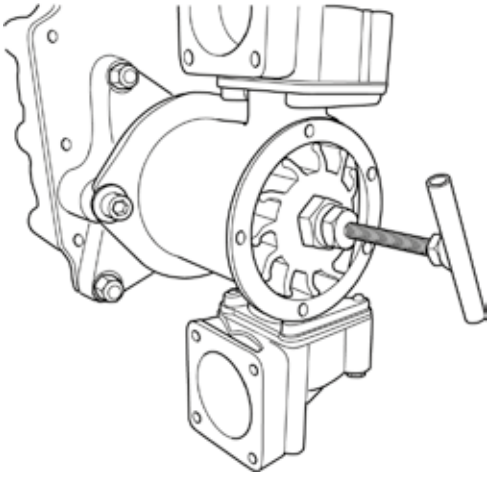

IMPORTANT !

When fitting the new impeller, bend the vanes in the same direction as on the old one.

CHANGING THE COOLANT AND CLEANING THE COOLING SYSTEM

DRAINING COOLANT
Special tool

Number	Description	Illustration
965400003	Coolant pump	

WARNING !

Do not open the coolant filler cap in the expansion tank if the engine is hot. Hot coolant and steam may spray out and cause burns. If the ap has to be opened do it slowly to release the pressure before removing the cap. Use protective gloves as coolant can cause irritation if it comes in contact with the skin.

1. Open the expansion tank cap.
2. Position the hose from the coolant pump in an empty container.
3. Connect the pump to the draining nipple in the cylinder block. See illustration.

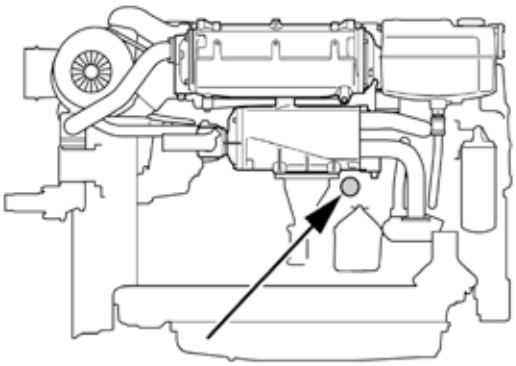

Drain nipple in the cylinder block

4. Connect the pump's 2 cable terminals to the battery's negative and positive terminal. Make sure that the drainage starts. If the drainage does not start: Change the position of the cable terminals.
5. Repeat the procedure at the cooling system's lowest drainage point. The location of the lowest drainage point on the engine may differ depending on engine application.

DRAINING THE SEA WATER CIRCUIT

1. Close the bottom valve on the sea water inlet and remove the connection pipe (1) on the outlet from the heat exchanger.
2. Remove the cover (2) from the sea water pump to empty the pump completely.

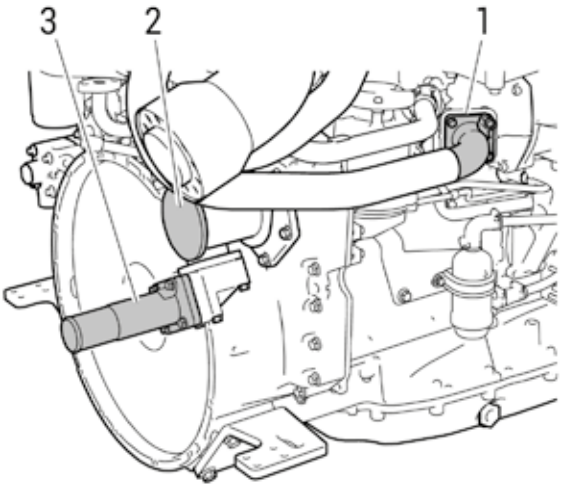

The lowest point in the sea water circuit may be at different points, but it is usually in the sea water pump intake (3).

IMPORTANT !

Plug the connections to prevent dirt ingress into the engine.

REMOVING THE CHARGE AIR COOLER

When the cooler core of the charge air cooler needs cleaning, the charge air cooler must be removed if there is no space behind it to take out the cooler core.

Before starting work : Make sure that the cooling system is empty as described earlier.

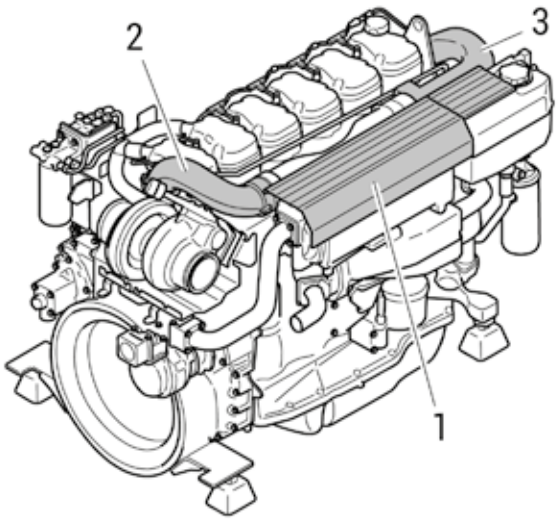

1. Remove the protective plate (1) on the charge air cooler.
2. Remove the charge air pipe (2) between the charge air cooler and the turbocharger. Twist the pipe to facilitate removal. If the turbocharger has a wastegate valve and the charge air pipe must be removed, the pipe bracket must be removed and the pipe must be turned 90° upwards before the hose and the pipe are removed.
3. Remove the charge air pipe (3) between the charge air cooler and the inlet pipe.

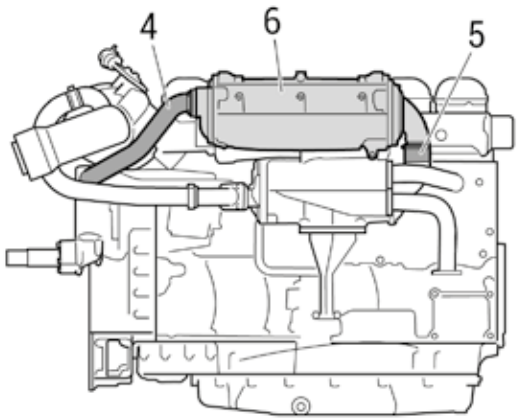

4. Remove the water pipe (4) of the charge air cooler.
5. Release the hose clamp and remove the sea water hose (5) between the charge air cooler and the heat exchanger.
6. Remove the charge air cooler (6).

CLEANING THE CHARGE AIR COOLER

The charge air cooler must be removed if there is no space behind it to take out the cooler core. See previous section.

1. Remove the screws on the charge air cooler covers (1) and remove the covers. Mark the covers so that you can put them back on the correct side.
2. Press in the cooler core (3) slightly on one side and pull it out from the other side.
3. Clean the cooler core on the outside with paraffin-based engine detergent. Remove any internal deposits using a round rod. Renew the cooler core if it is damaged.

IMPORTANT !

Do not use caustic soda as this could damage the aluminium.

4. Renew damaged or hard O-rings (2).
5. Assemble the charge air cooler. Tighten the M8 screws on the covers to 15 Nm (11 lb-ft).

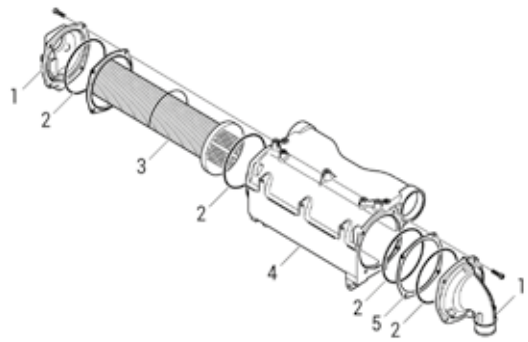

1. Cover.
2. O-rings.
3. Cooler core.
4. Charge air cooler housing.
5. Spacer.

REMOVING THE HEAT EXCHANGER

When the cooler core of the heat exchanger needs cleaning, the heat exchanger must be removed.

Before starting work : Make sure that the cooling system is empty as described earlier.

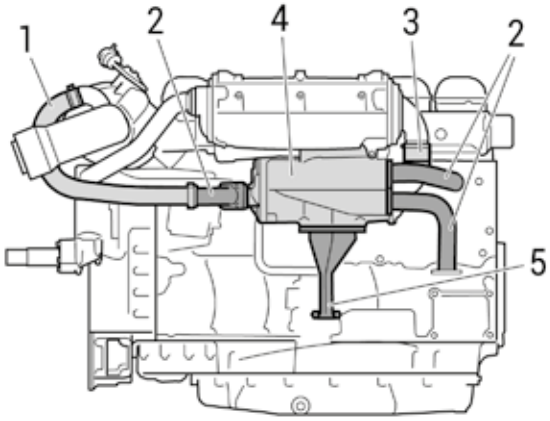

1. Undo the V-clamp for the hose (1) between the heat exchanger and the water-cooled exhaust pipe bend, if the engine has one. Bend the hose to one side.
2. Remove the inlet and outlet coolant pipes and the sea water pipe (2) from the heat exchanger.
3. Release the hose clamp and remove the sea water hose (3) between the charge air cooler and the heat exchanger.
4. Remove the screws holding the heat exchanger (4) in the two brackets.
5. Slacken the screws holding the heat exchanger bracket (5) in the cylinder block sufficiently to allow the heat exchanger to be removed.
6. Remove the heat exchanger.

CLEANING THE HEAT EXCHANGER

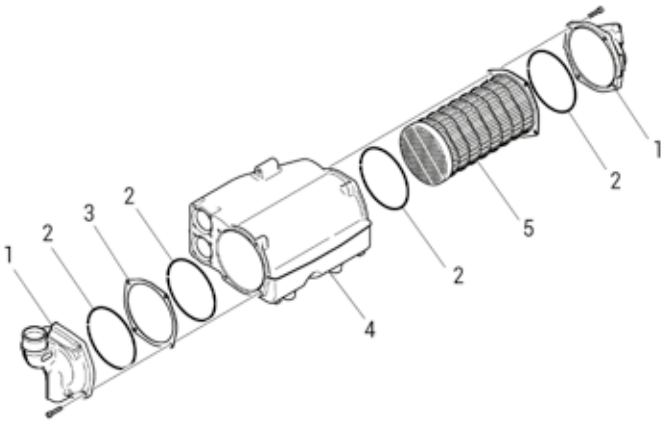

1. Cover.
2. O-rings.
3. Spacer.
4. Heat exchanger housing.
5. Cooler core.

1. Remove the screws on the heat exchanger covers (1) and remove the covers. Mark the covers so that you can put them back on the correct side.
2. Press in the cooler core (5) slightly on one side and pull it out from the other side.
3. Clean the cooler core on the outside with paraffin-based engine detergent. Remove any internal deposits using a round rod. Renew the cooler core if it is damaged.

IMPORTANT !

Do not use caustic soda as this could damage the aluminium.

4. Renew damaged or hard O-rings (2).
5. Assemble the heat exchanger. Tighten the M8 screws on the covers to 15 Nm (11 lb-ft).

FITTING THE HEAT EXCHANGER

IMPORTANT !

There is a risk that the joint will crack if these installation instructions are not followed.

Tightening torque :
M6 10 Nm (7 lb-ft)
M8 26 Nm (19 lb-ft)
M10 50 Nm (37 lb-ft)

1. Fit the heat exchanger (4) in place against the brackets.
2. Fit the sea water hose (3) between the heat exchanger and charge air cooler (use vaseline if necessary) and tighten the hose clamp.

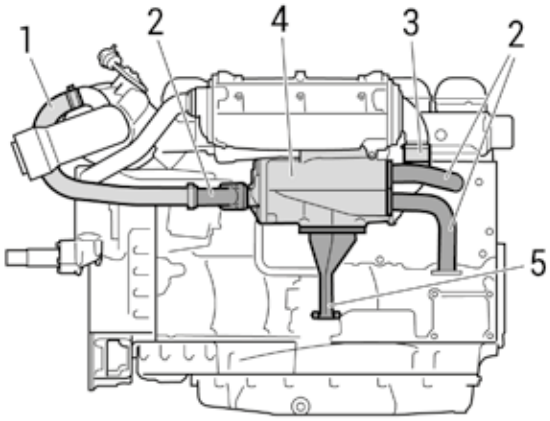

IMPORTANT !

To prevent leakage, a hose clamp with a safety ring can be used.

3. Fit the screws (5 off) securing the heat exchanger without tightening them.
4. Tighten the screws securing the heat exchanger bracket (5) in the cylinder block.
5. First tighten the screw on the charge air cooler bracket and then the 4 screws on the heat exchanger bracket.
6. Fit the inlet and outlet coolant pipes and the sea water pipe from the heat exchanger (2).
7. Fit the hose (1) between the heat exchanger and the water-cooled exhaust pipe bend and tighten the

FITTING THE CHARGE AIR COOLER

Tightening torque :
M6 10 Nm (7 lb-ft)
M8 26 Nm (19 lb-ft)
M10 50 Nm (37 lb-ft)

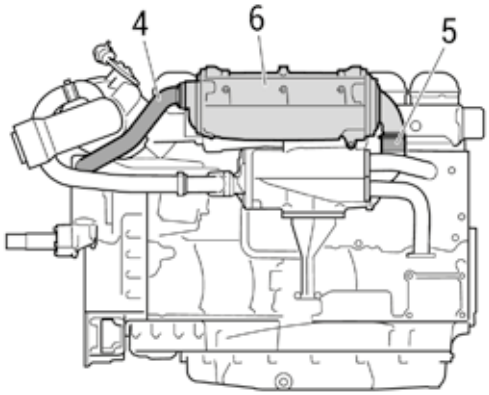

1. Fit the charge air cooler (6) in place against the brackets.
2. Fit the sea water hose (5) between the charge air cooler and heat exchanger (use vaseline if necessary) and tighten the hose clamp.
3. Fit the screws for the charge air cooler brackets and tighten them.
4. Fit the water pipe (4) between the water pump and the charge air cooler.

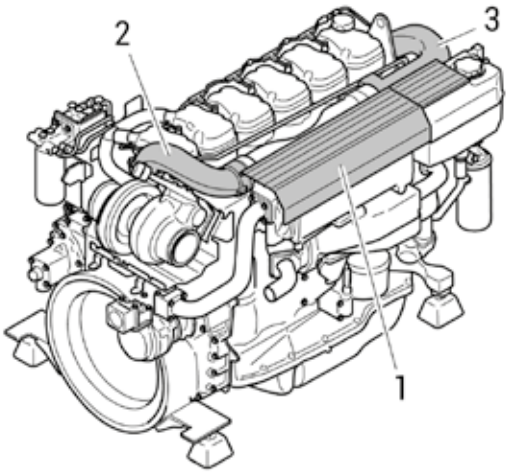

5. Fit the charge air pipe (3) between the intake manifold and charge air cooler. To facilitate fitting, lubricate the O-ring and the inside of the connection in the charge air cooler with vaseline. Press the charge air pipe straight towards the charge air cooler while carefully twisting the pipe to the right and left. Check that the charge air pipe is properly fitted.
6. Fit the charge air pipe (2) between the charge air cooler and turbocharger. To facilitate fitting, lubricate the O-ring and the inside of the connection in the charge air cooler with vaseline. Press the charge air pipe straight towards the charge air cooler while carefully twisting the pipe to the right and left. Check that the charge air pipe is properly fitted.
7. Fit the protective plate (1) on the charge air cooler.

INTERNAL CLEANING: REMOVING OIL AND GREASE FROM COOLING SYSTEM

Always fit a new thermostat and a new cover to the expansion tank after cleaning, as the oil in the cooling system destroys the seals. If the engine is equipped with a coolant filter, also renew this filter.

It may be necessary to wash it multiple times if the cooling system is very dirty. One cause of contamination can be that oil is lying on top of the coolant and collecting high up in the cooling system. If several rinses are needed, this is not necessarily because work has been carried out incorrectly. Oil residues often need to be rinsed repeatedly from the expansion tank and the external heating system to be completely clean.

Repeated washing is more effective and preferable to using higher concentrations of detergent (max. 10%) or cleaning for a longer period (max 30 minutes).

If only a small amount of dirt has been collected in the expansion tank after cleaning, one extra rinse and clean of the expansion tank only is usually sufficient. There is no need to clean the whole cooling system again.

1. Run the engine until it has reached operating temperature and drain the cooling system following the previous description.
2. Remove the thermostat.
3. Fill the cooling system with clean, hot water mixed with a dishwasher detergent for household dishwashers that does not foam. Concentration 1%.
4. Run the engine until it has reached operating temperature for approximately 20-30 minutes. Remember to switch on the cab heating system, if one is installed.
5. Drain the cooling system.
6. Fill the cooling system with clean, hot water and run the engine for about 20-30 minutes.
7. Repeat steps 3-6 if the cooling system is not clean.
8. Drain the water from the cooling system.
9. If necessary, clean the expansion tank by detaching all hoses and rinsing and cleaning with a degreasing agent and a dishwashing brush.
   Alternatively, dismantle the expansion tank and clean it with water with 10% of dishwasher detergent does not foam. Fill the expansion tank with the mixture, shake it around and drain it. Renew the cover of the expansion tank.
10. Fit a new thermostat.
11. Fill the cooling system with new coolant as described in the next section.
12. Check again whether further dirt or oil has collected in the expansion tank. Decide whether it it is necessary to carry out another full cleaning or whether only rinsing or cleaning of the expansion tank will suffice.

INTERNAL CLEANING: REMOVING DEPOSITS FROM COOLING SYSTEM

1. Run the engine until it has reached operating temperature and then drain the cooling system following the previous description.
2. Remove the thermostat.
3. Fill the cooling system with clean, hot water mixed with radiator detergent which is based on sulphamic acid and contains dispersing agents. Follow the manufacturer's instructions for the concentration and cleaning period.
4. Run the engine for the specified time. Remember to switch on the cab heating system, if one is installed.
5. Drain the cooling system.
6. Fill the cooling system with clean, hot water and run the engine for about 20-30 minutes.
7. Drain the water from the cooling system.

8. Reinstall the thermostat.
9. Fill the cooling system with new coolant as described in the next section.

FILLING COOLANT

This procedure applies when the cooling system has been drained and needs to be filled with a large amount of coolant.

Special tool

Number	Description	Illustration
965400003	Coolant pump	

WARNING !

Use protective gloves as coolant can cause irritation if it comes in contact with the skin. Hot coolant can also cause scalding.

IMPORTANT !

Mix the coolant as specified in the section headed Coolant.

It is not permissible to top up large amounts of coolant via the expansion tank. Filling via the expansion tank leads to air locks in the cooling system which can lead to e.g. damage to the coolant pump shaft seal. If a large amount of coolant needs to be added, follow the instructions in the section Filling coolant.

Never fill a large amount of cold coolant in a hot engine. There is great risk of cracks forming in the cylinder block and cylinder heads.

Do not start the engine until the correct coolant level has been obtained. If the engine is started with an insufficient coolant level, it can damage the coolant pump shaft seal, which leads to coolant leakage.

1. Open the expansion tank cap.
2. Connect the coolant pump to the filler nipple in the cylinder block.
3. Connect the pump's 2 cable terminals to the battery's negative and positive terminal. Make sure that the filling starts. If the filling does not start: Change the position of the cable terminals.
4. Start the engine and run it at idling for 15 minutes.

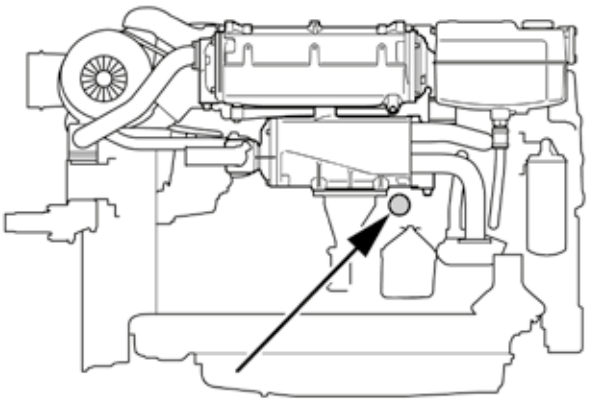

Filler nipple in the cylinder block

IMPORTANT !

It is very important that the engine is idling. Engine overspeed could damage the coolant pump shaft seal, which leads to coolant leakage.

5. Switch off the engine and fill with coolant to the maximum level through the expansion tank.

   Air pockets may still be left in the cooling system. These will disappear after the engine has been operated for a period of time.

   Therefore, the coolant may need topping up at a later stage.

FINISHING WORK

1. Open the bottom valve on the sea water inlet.
2. Start the engine and check that no leakage occurs.

Check the coolant level and top up the coolant via the expansion tank if necessary.

MAXIMUM TILT ANGLES DURING OPERATION

Maximum permissible angles of inclination during operation vary, depending on the type of oil sump. See illustration.

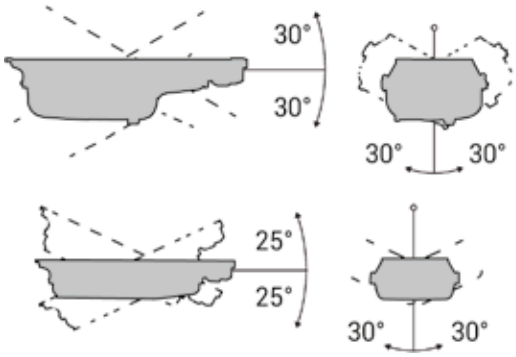

ELECTRICAL SYSTEM

DANGER !

Stop the engine and switch off the main breaker before working on the electrical system. Isolate shore current to any accessories supplying the engine.

CAUTION !

The main breaker switch must remain ON when the engine is operating. Never disconnect the cable between the alternator and the battery when the engine is running.

WIRES AND CONNECTORS

Check that electrical wires and connectors are dry and in good condition. Replace any defective part. Do not scrape green deposits on lugs in using grit : nickel plating would be removed and bare copper would corrode even faster. Tighten time to time all terminals secured by screws. Do not forget breakers in the electrical cabinet.

To avoid any risk of electromagnetic interference, it is recommended that all electrical cables inside the system be twisted in pairs with 35-40 cables / m. This recommendation applies only to external signal cables connected to the system.

If a shielded electrical cable is used, the shield must be grounded and not 0V ground. Ground pin 3 of beam-beam connector C1 of the main display. See Main Display (DCU), Connections. Only connect the shield to one end of the power cable.

To ensure good separation of electromagnetic interference that may occur, some electrical cables may be routed separately from each other, e.g. the signal cable from a magnetic pulse sensor. The electrical cables of the power supply of the auxiliary display must have a cross section of at least 1.5 mm2 and be connected to a fuse of their own, powered directly from the battery.

The main display receives its power supply from the connection box.

Separate the mass and 0 V. In marine installations, the mass and the 0 V must not be connected. The hull is the ground and the negative terminal of the battery is 0 V.

24 V and 0 V are filtered in the main display to reduce electromagnetic interference. If the mass and 0 V are connected, the filters in the main display do not work.

ENGINE COMMAND CONNECTORS

Engine block is linked to the communication box via two cables. These are corresponding to :

C4001 (Engine) = C5 (Box) = CAN
C4002 (Engine) = C6 (Box) = Throttle

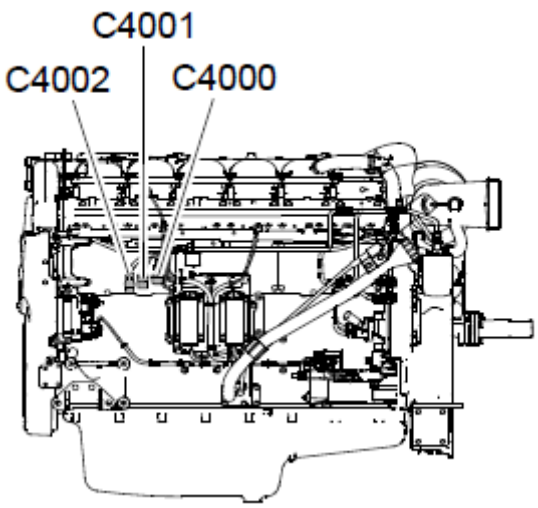

BATTERY

DANGER !

Disconnect the battery cables before contemplating any kind of soldering work. Arc welding is a carrier of heavy transients currents and may affect (or destroy) many sensitive electronic components such as the E.C.U.

Read below recommendations before operating or servicing the battery.

To charge two independent batteries with a single alternator, an isolator is available as an option on most engines. Contact an authorized Nanni representative.

KEEP CLEAN THE BATTERY

The Battery(ies) should be kept clean and dry. Oxidization deposits on the battery and on terminals posts may lead to a wide variety of disturbances like : dead shorts, voltage drops, premature discharging, notably in wet or cold weather. In some occurances, these disturbances may be hard to locate. Use a brass brush to clean battery terminals posts.

DISCONNECT THE STARTER CABLES

1. Disconnect the negative cable (-) first.
2. Then remove the positive (+) cable.

If the battery is replaced, make sure that the previous one was the correct model.

CONNECT THE CABLES

1. Always connect first the positive lead (+) to the positive terminal (+) of the battery
2. And then the negative (-).

BATTERY ELECTROLYTE LEVEL

DANGER !

Never touch the battery electrolyte with bare fingers. The diluted sulphuric acid solution burns skin and will pierce clothing. Should this occur, immediately wash garnments with spring water. Obtain medical advice and assistance without delay for burns.

ELECTROLYTE LEVEL CHECK

In general, detailed informations for service provided by battery manufacturers are very scarce. As a conservative rule, electrolyte level must always be above the top of the lead plates (+/-1 cm - slighlty less than half of an inch). Electrolyte is a mix of sulfuric acid and water. If level is decreasing, acid concentration is not supposed to deplete with evaporation. Water alone must be added, but it is a good practice to check also the specific gravity with a hydrometer. Follow these indications :

Unscrew completely the vent plugs and check level with a flashlight in each and every orifice.

Use a syringe filled with distilled water to top up the compartment where electrolyte level is too low.

Check gravity in each cell. A reading below 1.215 requires either charging the battery or to replace it.

If the lead plates are not sulfated and still in good condition, charging will improve specific gravity.

Specific Gravity	Charge
1.260	100%
1.230	75%
1.200	50%
1.170	25%
1.140	Very low capacity
1.110	Discharged

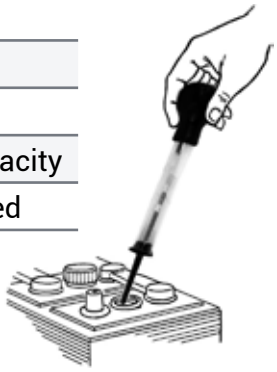

NOTE !

Never shake the battery during the process of adding electrolyte !

If the battery electrolyte level cannot be adjusted (maintenance free battery type), do not use or charge the battery if the fluid level is below the lower limit level.

If the battery has been left unattended for an extended period of time, it is likely that the battery has entered in a deep discharge process. In such a case, voltage read would be around 7 Volts or so.
In such a case, it would be very unlikely for the battery to recover and it is to fear that any charge attempt will fail.

Nevertheless, if a new compatible battery is not available at the nearest selling store, it is possible to try this (without any guarantee) :

- Empty the electrolyte,
- Rinse the battery with spring water,
- Empty the spring water and fill with distilled water,
- Give a several hours charge,
- Empty the water,
- Fill the battery with new electrolyte ready to use,
- Charge the battery.

ALTERNATOR BELT

The engine alternator is driven by a belt through pulleys. These components must be in good order at all times in view for the alternator to provide electricity, among others, to the engine, to the battery, to the engine control panel.

DANGER !

Stop the engine and remove the key before checking or servicing the alternator belt.

NOTE !

Always keep a spare replacement belt on-board.

IMPORTANT !

A loosen or damaged belt can result in overheats or lack of alternator charge. A too tighten belt can damage the bearings of the water pump and of the alternator.

VISUAL CHECK OF THE BELT :

If belt internal wires become visible and frayed, replace the belt. Check that belt fits properly in the pulley. Belt is constantly tensioned by an automatic belt tensioner.

CHECK THE BELT TENSION :

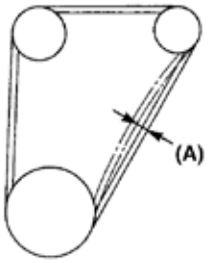

Depress the belt at point (A) and check for a deflection between 7 and 9 mm.

If not within specification, loosen the alternator (in grey on picture) and relocate it properly to adjust.

TO REPLACE THE BELT :

1. Stop the engine and remove the key from the panel.
2. Move the tensionner mechanism using a wrench and slip out the belt from the alternator pulley. Remove it completely.
3. Install the new belt. Check that the belt seats nicely between the flanges of all the pulleys.
4. Check the tension after few hours of operation. FUSES

The engine electrical system is protected from electrical overloads by fuses. On N2.10 and N2.14 engines, fuses and relays are located in the electrical loom.

If the engine does not start or if the instruments panel does not operate, a fault might be somewhere in the electrical system and a fuse may have blown up.

Investigate the cause before replacing the faulty fuse straight away. Keep an assortment of spare fuses on hand. Replace a fuse with one of the same rating.

CAUTION !

If the replaced fuse blows again, the failure is larger than a simple incident. If you are still at shore, do not start the engine, and check first on your on in taking all usual precautions. If the fault is not resolved quickly, contact your nearest Nanni representative for repair.

If you are at open sea, try to locate the fault and to repair by yourself. Depending of the severity of the fault and if the event is endangering navigation, establish a radio contact to get help. Take steps as advised.

MISCELLANEOUS

CHECKING THE DRIVE BELT

Before starting, make a note of how the drive belt is fitted. Refit the drive belt with the same direction of rotation as it had before removal.

1. Check the drive belt for cracks. Renew the drive belt if deep cracks have formed.

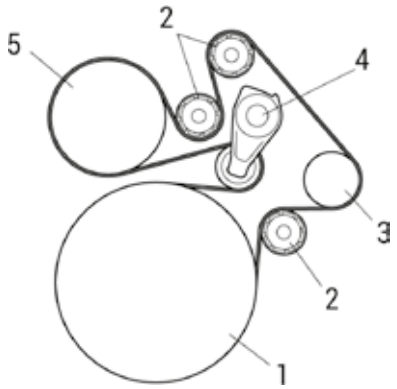

Example of a drive belt.
1. Crankshaft.
2. Idler roller.
3. Alternator.
4. Belt tensioner.
5. Coolant pump.

NOTE !

Small and shallow cracks are normal and form after only a few hours of operation. They do not mean that the drive belt needs to be renewed. If there are many deep cracks, or if parts of the drive belt have started to come off, the drive belt must then be renewed.

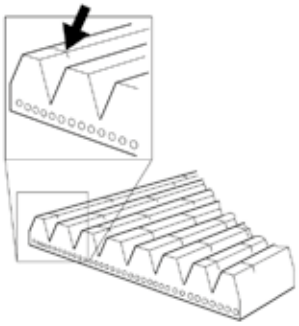

Example of a minor crack in the drive belt. The drive belt can be refitted.

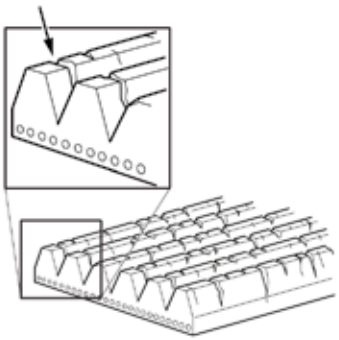

The drive belt has deep cracks and must be renewed.

2. Check drive belt wear. Renew the drive belt if it is too worn.

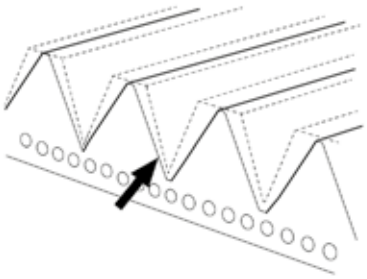

The drive belt is starting to become worn, but can be refitted.

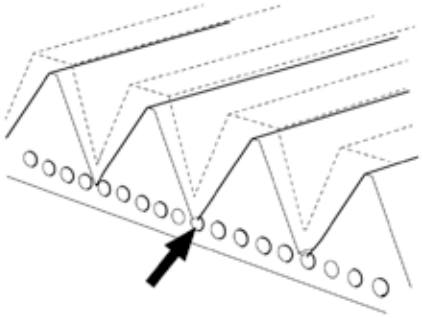

The belt is worn down to the cord. The drive belt must be renewed.

CHECKING FOR LEAKS

IMPORTANT !

If serious leakage occurs, contact your nearest NANNI representative.

1. Start the engine.
2. Check for oil, coolant, fuel, air or exhaust leaks.
3. Tighten or renew leaking connections. Check the overflow holes which show whether the O-rings between the cylinder liners and crankcase are leaking.
4. Check whether the drain hole on the coolant pump is blocked. If there is a leak, renew the seal in the pump or the complete coolant pump.

CHECKING AND ADJUSTING THE VALVE CLEARANCE

Special tools

Number	Description	Illustration
965400004	Turning tool for rotating the flywheel from below	
965400005	Turning tool for rotating the flywheel from above	

Other tools

Torque wrench, 0-50 Nm
Waterproof felt-tip pen
Feeler gauge 0.45 and 0.70 mm
Flash light
Mirror

WARNING !

Block the starting device or remove a battery cable. If the engine starts unexpectedly, there is a serious risk of injury.

IMPORTANT !

The engine must be cold when the work is carried out. Remember to remove the turning tool from the flywheel after adjustment.

NOTE !

Carry out the working without pausing, so that no step is overlooked.

Carry out a check and adjustment of the valve clearances one more time after the first 500 hours of operation. After this, adjustment according to the regular interval takes place, which is every 2,000 operational hours.

On the flywheel is engraved the reference information UP TDC, DOWN TDC and the angle indications listed in the table below. Depending on the engine installation, this information is visible in one of the windows, either furthest up or furthest down on the flywheel. See illustration.

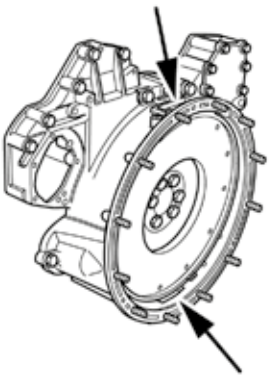

Upper and lower window to read the engraving on the flywheel.

Valve clearance, specifications	
Intake valve	0.45mm (0.018 in)
Exhaust valve	0.70mm (0.028 in)

Tightening torques	
Lock nut for valves	35 Nm (26 lb-ft)

Adjust valves according to the table below. Follow the respective column depending on whether you are reading the engraving on the flywheel in the lower or the upper window. Start adjustment at the top of the table.

Reading in the lower window	Valve transition on cylinder	Adjust valves on cylinder	Reading in the upper window
DOWN TDC	6	1	UP TDC
120/480	2	5	300/660
240/600	4	3	60/420
DOWN TDC	1	6	UP TDC
120/480	5	2	300/600
240/600	3	4	60/420

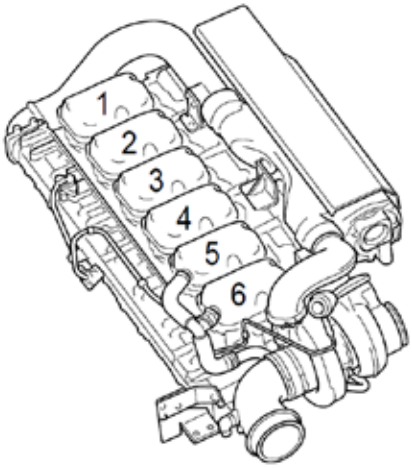

Order of cylinders

1. Clean the rocker covers and the area around them.
2. Remove the rocker covers.
3. Use the turning tool appropriate to the installation of the engine. Tool 99 309 (or equivalent from other suppliers) is used to rotate the flywheel from the underside of the engine and tool 2 402 509 (or equivalent from other suppliers) is used from the top side.
4. Start adjusting one cylinder according to the table. Rotate the flywheel until the correct engraving can be read on the flywheel. It may be necessary to rotate it more than 1 revolution.

   Rotate the flywheel in the rotational direction of the engine, which is clockwise viewed from the front of the engine and anticlockwise viewed from the back of the engine.

   During a valve transition, the exhaust valve (the long arm) is closing at the same time as the intake valve is opening.

   The UP TDC engraving on the flywheel is now visible in the window furthest up on the flywheel. The DOWN TDC engraving is visible in the lower window.
5. Read the table on the previous page to see which valve to adjust.
6. Stick the feeler gauge under the pressure pad of the rocker arm and check the valve clearance.
7. If necessary, adjust the valve clearance by

   a) loosening the lock nut on the end of the rocker arm
   b) adjusting the valve clearance with the adjusting

screw
c) tightening the lock nut.

8. Mark the rocker arm with the felt-tip pen and then continue with the next cylinder according to the table.

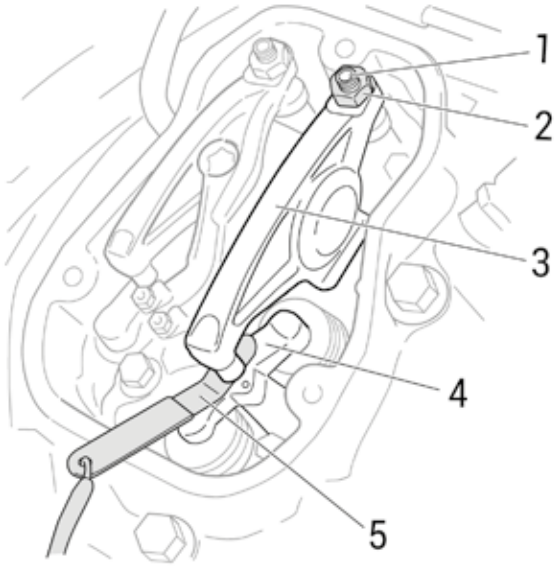

1. Adjusting screw
2. Lock nut
3. Rocker arm
4. Valve bridge
5. Feeler gauge

S09 STORAGE

S09 STORAGE 95
LONG TERM STORAGE 96
LONG TERM STORAGE PROCEDURE 96
RESTARTING THE ENGINE 97
BATTERY 97

LONG TERM STORAGE

A set of operations must be performed to prepare and protect the engine for a long-term storage.

See the Maintenance Section 08 - Raw water System - Risk of icing conditions / Protection against frost, to perform some of the Long Term Storage operations. We recommend that you have all these operations carried out by a Nanni authorized workshop.

NOTE !

It might be necessary to adapt these operations depending the climatic conditions. Contact a Nanni authorized workshop for further informations.

For a prolonged storage (over 12 months), a specific set of measures must be performed. All these operations should be carried out by a Nanni authorized workshop.

CAUTION !

If the engine is likely to be subject to frost, drain all water in the seawater circuit.

LONG TERM STORAGE PROCEDURE

Complete the nearest periodic maintenance inspections and operations before performing the long term storage procedure.

1. Drain and change the engine and transmission oil.
2. Change the engine oil filter.
3. Change the fuel filter and prefilter.
4. Run the engine to normal operating temperature.
5. Stop the engine and take the boat out of water.
6. Drain and clean all components of the seawater system. Protect the components against corrosion.
7. Remove the impeller from the seawater pump (if fitted). Store it in a cool and dry place. Indicate by any means that the impeller has been removed.
8. Check the engine coolant leve and condition. Top up if necessary.
9. Drain any water and contaminants from the fuel tank.
10. Fill totally the fuel tank.
11. Remove the air filter. Secure all air intake with clean clothes.
12. Clean the engine. Repair any damaged areas of paintwork with Nanni original paint.

CAUTION !

Do not point a high pressure water jet toward seals, hoses, grommets, etc.

13. Clean the hull, the hold and the drive (if fitted).
14. Check all control cables. Use grease and rust inhibitor to protect the cables.
15. Disconnect battery leads. Adjust electrolyte level if necessary. Charge the battery. Store the battery in a dry place.
16. Release tension. on belts.
17. Spray the engine with water-repellent product.
18. Remove the propeller for storage. Check the overall condition of all components of the propulsion system.

RESTARTING THE ENGINE

1. Perform external cleaning of the engine and control its condition.
2. Drain and change the engine and transmission oil.
3. Change oil filters.
4. Drain the coolant from the seawater system.
5. Check the condition of the raw water pump impeller. Change it if needed. Install the impeller.
6. Remove cloth and tape from openings. Install the air filter.
7. Close/Tighten all plugs and drain cocks.
8. Check the condition of hoses and clamps.
9. Check the engine coolant level and its condition. Top up if necessary.
10. Connect fully charged batteries.
11. Check the anodes.
12. Install the propeller.
13. Check the operation of the control cables and their condition.
14. Check belts. Adjust the tension.
15. Bleed the fuel system.

Once the boat is in the water :

16. Open the sea cock and prime the seawater system (if fitted).
17. Start the engine. Check for leaks and correct operation.

BATTERY

When storing the engine, adjust the battery electrolyte level and store it in a dry place at room temperature. Recharge the battery as often as possible to extend its service life.

Do not left the battery unattended for a long period of time: it will get into deep discharge (around 7-8 Volts). In such a situation, the battery will not recover.

S10 TROUBLESHOOTING

CAUTION !

If the engine does not function properly, use the following chart to identify the cause. If the cause of trouble can not be found, contact to Nanni authorized workshop.

NOTE !

Some components may not be part of the engine orderes. This list is not exhaustive and is only ab assistance in case of emergencies.

	PROBABLE CAUSES
The engine fails to start	1, 2, 3, 4, 5, 6, 7, 8, 9, 10, 11, 13
The engine starts but suddenly stops	1, 2, 3, 4, 5
The engine is difficult to start	1, 2, 3, 4, 5, 6, 8, 9
The starter motor is not turning or turn slowly	8, 9
The starter motor turns but the engine does not start	1, 2, 3, 4, 5, 6, 7
The engine does not reach its rated speed at wide open throttle	2, 3, 4, 5, 6, 7, 12, 14, 15, 16, 17, 26, 28
The engine operate unevenly	1, 2, 3, 4, 5, 6, 7, 14, 15, 16, 17, 18, 19, 20, 24, 28
The engine vibrates a lot	16, 27
Black exhaust smoke	4, 5, 14, 15, 16, 19, 20, 28, 29
White exhaust smoke	4, 5, 23, 25
High fuel consumption	4, 7, 14, 15, 16, 19, 20, 22, 28
The engine overheats / coolant temperature too high	14, 15, 16, 18, 19, 20, 21, 22, 28
The control lever is hard to operate	12, 14, 15, 16, 17, 26
No shift between ahead and astern	9, 11, 12, 16, 17, 26
Battery charge warning lamp comes on	8, 9, 11, 18

The numbers refer to the possible causes indicated on the following page.*
Contact a Nanni authorized workshop.

S10 TROUBLESHOOTING

1. Lack of fuel
2. Air in fuel system
3. Fuel filter fouled or clogged
4. Fuel do not meet specified standard
5. Water/contaminants in fuel
6. Valve clearance is wrong *
7. Low compression *
8. Insufficient battery charge / Defective battery
9. Faulty electrical cables contact
10. Faulty starter or starter switch *
11. Tripped fuse / Main switch is open
12. Transmission is damaged*
13. Control lever not in neutral / Stop control pulled out
14. Too much load on board
15. Fouling on underwater hull, drive or propeller
16. Defective/incorrect propeller *
17. Faulty operation of control lever / control cables
18. Loosen or damaged belt
19. Incorrect coolant / Low coolant level / Coolant leaks
20. Cooling system does not operate correctly *
21. Faulty thermostat *
22. Sea cock valve closed / Raw water filter clogged
23. Lube oil burns. Excessive oil consumption *
24. Engine oil level too low
25. Engine oil level too high
26. Transmission oil level too low
27. Defective engine mounting *
28. Insufficient air supply *
29. Clogged air filter or lack of air on admission

N13.700 CR3 HD

FICHE TECHNIQUE *DATA SHEET*

CARACTERISTIQUES GENERALES *GENERAL DATA*

Base moteur *Engine Base*		Scania
Configuration *Configuration*		6 cylindres en ligne *6 cylinders in line*
Type *Type*		4 temps Diesel *4 strokes Diesel*
Nombre de soupapes par cylindre *N° of vales per cylinder*		4
Taux de compression *Compression Ratio*		17.3 : 1
Admission *Air intake*		Turbocompresseur avec isolation thermique *Turbocharged with heat insulated*
Distribution *Valve train*		Distribution par pignons *Gear driven valve train*
Système d'injection *Fuel system*		Injection Rampe Commune (XPI) *Common Rail Injection (XPI)*
Ordre d'allumage *Firing order*		1 - 5 - 3 - 6 - 2 - 4
Sens de rotation (vue côté volant moteur) *Rotational direction (view flywheel side)*		Antihoraire *Counter clockwise*
Cylindrée *Displacement*	liltres	12.7
	in³	775
Alésage *Bore*	mm	130
	in	5.1
Course *Stroke*	mm	160
	in	6.3
Régime de ralenti *Idling speed*	tr/min *rpm*	600
Régime nominal *Rated speed*	tr/min *rpm*	2100
Régime maxi coupure régulateur *High speed governor break point*	tr/min *rpm*	2300
Nombres d'émissions *Emission compliance*		IMO Tier II
		US Tier 3
		EU Stage IIIA

SYSTEME DE LUBRIFICATION *LUBRICATION SYSTEM*

Pression d'huile au ralenti *Oil pressure @ idle speed*	bar	0.7
	psi	10.2

N13.700 CR3 HD

515 kW [700 hp]

SYSTEME DE LUBRIFICATION (suite) *LUBRICATION SYSTEM (continued)*

Pression d'huile au régime nominal *Oil pressure @ rated speed*		bar	3 / 6
		psi	43.5 / 87.0
Capacité d'huile sans filtre, angle 0° *Oil quantity excluding filter @ 0° angle*		litres	38
		gal US	10
Angle d'installation maxi admissible *Maximum permitted installed tilt*	volant vers le bas *front down*	°	12
	volant vers le haut *front up*	°	12
	volant lateral *lateral*		12
Inclinaison admissible en fonctionnement intermittent *Maximum permitted intermittent*	maxi *tilt*	°	25
	latéral maxi *side tilt*	°	30

PERFORMANCE *PERFORMANCE*

Régime de rotation du vilebrequin ***RPM @ cranckshaft***	**tr/min** ***rpm***	**600**	**1200**	**1400**	**1500**	**1800**	**2100**
Couple au vilbrequin *Torque @ cranckshaft*	Nm	1126	2578	2981	2973	2690	2342
	ft-lb	830	1900	2199	2193	1984	1727
Puissance au vilebrequin *Power @ cranckshaft*	hp	96	441	594	635	690	700
	Kw	71	324	437	467	507	515
Puissance à l'hélice calculée pour charge exp.2.5 *Power at calculated propeller load exp.2.5*	hp	31	173	254	302	476	700
	Kw	22	127	187	222	350	515

SYSTEME D'INJECTION *FUEL SYSTEM*

Régime de rotation au vilebrequin ***RPM @ cranckshaft***	**tr/min** **rpm**	**600**	**1200**	**1400**	**1500**	**1800**	**2100**
Consommation spécifique de carburant *Specific fuel consumption*	g/kWh	219	209	198	197	197	214
Consommation de carburant charge exp.2.5 *Fuel consumption propeller load exp.2.5*	l/h	6	31	46	55	86	131
	gal US/h	1.6	8.2	12.2	14.5	22.7	34.6
Consommation de carburant à pleine charge *Fuel consumption at full load*	l/h	131					
	gal US/h	34.6					
Débit volumique de carburant à pleine charge *Total volumetric fuel flow at full load*	l/h	180					
	gal US/h	45.6					
Restriction maximale d'admission de carburant *Maximum fuel inlet restriction*	kPa	30					
	psi	4.4					
Résistance maxi au passage du carburant *Maximum permitted fuel inlet pressure*	kPa	35					
	psi	5.1					
Pression maxi admissible *Maximum permitted fuel return pressure*	kPa	35					
	psi	5.1					

N13.700 CR3 HD

515 kW [700 hp]

SYSTÈME DE REFROIDISSEMENT *COOLING SYSTEM*

Débit - liquide de refroidissement *Coolant circulation pump flow*	l/min	335 à 580
	gal US/min	88.5 to 153.2
Débit - eau brute (Pompe rotor caoutchouc) *Raw water pump flow (Rubber Impeller Pump)*	l/min	310
	gal US/min	81.9
Chaleur total dégagée à puissance nominale *Total heat rejection at rated speed*	kW	373
	BTU/min	21212
Capacité liquide de refroidissement *Total coolant capacity*	l	40
	gal US	10.6
Thermostat, début d'ouverture *Thermostat, start open at*	°C	80 / 87
	°F	176 / 189
Thermostat, ouverture complète *Thermostat, fully open at*	°C	90 / 95
	°F	194 / 203

SYSTÈME D'ÉCHAPPEMENT *EXHAUST SYSTEM*

Débit de gaz d'échappement *Exhaust gas flow*	kg/min	43
Contre-pression maxi admissible dans le circuit d'échappement *Permitted back pressure in the exhaust line*	bar	0.1
	inH^2O	40.15
Température d'échappement maxi *Maximum exhaust temperature*	°C	540
	°F	1004

SYSTEME D'ADMISSION *AIR INTAKE SYSTEM*

Consommation d'air du moteur à 25°C *Engine air consumption at 25°C*	kg/min	41.3
Température d'air d'admission maxi admissible *Maximum allowance intake air temperature*	°C	30
	°F	86
Différence maxi de T° - Ambiant/air d'admission *Maximum temperature rise - ambient to engine inlet*	°C	10
	°F	50
Air d'admission - Résistance maxi admissible, filtre à air propre *Maximum air intake restriction, Clean air filter*	kPa	0.3
	inH^2O	12.04
Air d'admission - Résistance maxi admissible, filtre à air sale *Maximum air intake restriction, Dirty air filter*	kPa	6.5
	inH^2O	26.1
Pression de suralimentation *Boost pressure*	bar	1.9
	psi	27.56

N13.700 CR3 HD

515 kW [700 cv]

SYSTEME ELECTRIQUE *ELECTRICAL SYSTEM*

Alternateur *Alternator*	Tension *Voltage*	V	24
	Ampère *Amperes*	A	100
Démarreur électrique *Electric starter motor*		kW	7
Batterie - Courant de démarrage à froid minimum *Battery, minimum cold start current*		CCA	800
Batterie recommandée K20 *Recommanded batterie K20*		A/h	160

POIDS A SEC *DRY WEIGHT*

Poids sans transmission *Weight without transmission*	kg	1285
	lbs	2832.9

CONSEILS D'INSTALLATION *INSTALLATION TIPS*

Diamètre tuyau alimentation carburant *Fuel line supply diameter*	mm	12
	in	0.47
Diamètre tuyau retour carburant *Fuel line return diameter*	mm	12
	in	0.47
Diamètre Tuyau eau de mer *Sea water line diameter*	mm	50
	in	1.97
Diamètre ligne d'échappement *Exhaust line diameter*		En accord avec l'installation : voir contre pression *According to the installation : see back pressure*

CONSEILS D'UTILISATION *RATINGS*

Classe d'application *Rating*	M1.S
Service *Operating hours*	*Illimité* *Unlimited*
Facteur de charge *Load Factor*	*Jusqu'à 80%* *Up to 80%*
Cycle d'utilisation *Duty Cycle*	*Utilisation de la puissance maximale au maximum 1 heure toutes les 3 heures de fonctionnement. Le temps d'utilisation restant sans dépasser le régime de croisière.* *Full power for no more than 1 hour out of each 3 hours of operation.* *The remaining operation time must be at or below cruising speed.*

NANNI INDUSTRIES S.A.S.
11, Avenue Mariotte - Zone Industrielle
33260 La Teste - France
Tel: +33 (0)5 56 22 30 60
Fax: +33 (0)5 56 22 30 79

Technical data according to ISO 8665. This document is not contractual. Nanni reserves the right to modify any of the characteristics stated in this document without notice, in a constant effort to improve the quality of its products. Images and illustrations may shown non standard equipements. All combination of equipment & accessory are not available.

N13.700 CR3

FICHE TECHNIQUE *DATA SHEET*

CARACTERISTIQUES GENERALES *GENERAL DATA*

Base moteur *Engine Base*		Scania
Configuration *Configuration*		6 cylindres en ligne *6 cylinders in line*
Type *Type*		4 temps Diesel *4 strokes Diesel*
Nombre de soupapes par cylindre *N° of vales per cylinder*		4
Taux de compression *Compression Ratio*		17.3 : 1
Admission *Air intake*		Turbocompresseur avec isolation thermique *Turbocharged with heat insulated*
Distribution *Valve train*		Distribution par pignons *Gear driven valve train*
Système d'injection *Fuel system*		Injection Rampe Commune (XPI) *Common Rail Injection (XPI)*
Ordre d'allumage *Firing order*		1 - 5 - 3 - 6 - 2 - 4
Sens de rotation (vue côté volant moteur) *Rotational direction (view flywheel side)*		Antihoraire *Counter clockwise*
Cylindrée *Displacement*	liltres	12.7
	in³	775
Alésage *Bore*	mm	130
	in	5.1
Course *Stroke*	mm	160
	in	6.3
Régime de ralenti *Idling speed*	tr/min *rpm*	600
Régime nominal *Rated speed*	tr/min *rpm*	2300
Régime maxi coupure régulateur *High speed governor break point*	tr/min *rpm*	2350
Nombres d'émissions *Emission compliance*		IMO Tier II
		US Tier 3
		EU Stage IIIA

SYSTEME DE LUBRIFICATION *LUBRICATION SYSTEM*

Pression d'huile au ralenti *Oil pressure @ idle speed*	bar	0.7
	psi	10.2

N13.700 CR3
515 kW [700 hp]

SYSTEME DE LUBRIFICATION (suite) *LUBRICATION SYSTEM (continued)*

Pression d'huile au régime nominal *Oil pressure @ rated speed*		bar	3 / 6
		psi	43.5 / 87.0
Capacité d'huile sans filtre, angle 0° *Oil quantity excluding filter @ 0° angle*		litres	34
		gal US	9
Angle d'installation maxi admissible *Maximum permitted installed tilt*	volant vers le bas *front down*	°	12
	volant vers le haut *front up*	°	12
	volant lateral *lateral*		12
Inclinaison admissible en fonctionnement intermittent *Maximum permitted intermittent*	maxi *tilt*	°	25
	latéral maxi *side tilt*	°	30

PERFORMANCE *PERFORMANCE*

Régime de rotation du vilebrequin ***RPM @ cranckshaft***	**tr/min** ***rpm***	**600**	**1200**	**1400**	**1500**	**1800**	**2100**	**2300**
Couple au vilbrequin *Torque @ cranckshaft*	Nm	1126	2578	2981	2973	2690	2342	2138
	ft-lb	830	1901	2199	2193	1984	1727	1777
Puissance au vilebrequin *Power @ cranckshaft*	hp	96	324	437	467	507	700	700
	Kw	71	441	594	635	690	515	515
Puissance à l'hélice calculée pour charge exp.2.5 *Power at calculated propeller load exp.2.5*	hp	24	138	202	241	379	558	700
	Kw	18	101	149	177	279	410	515

SYSTEME D'INJECTION *FUEL SYSTEM*

Régime de rotation au vilebrequin ***RPM @ cranckshaft***	**tr/min** **rpm**	**600**	**1200**	**1400**	**1500**	**1800**	**2100**	**2300**
Consommation spécifique de carburant *Specific fuel consumption*	g/kWh	219	217	198	197	197	214	214
Consommation de carburant charge exp.2.5 *Fuel consumption propeller load exp.2.5*	l/h	6	25	37	44	70	107	132
	gal US/h	1.6	6.6	9.8	11.6	18.5	28.3	34.9
Consommation de carburant à pleine charge *Fuel consumption at full load*	l/h				132			
	gal US/h				34.9			
Débit volumique de carburant à pleine charge *Total volumetric fuel flow at full load*	l/h				180			
	gal US/h				45.6			
Restriction maximale d'admission de carburant *Maximum fuel inlet restriction*	kPa				30			
	psi				4.4			
Résistance maxi au passage du carburant *Maximum permitted fuel inlet pressure*	kPa				35			
	psi				5.1			
Pression maxi admissible *Maximum permitted fuel return pressure*	kPa				35			
	psi				5.1			

N13.700 CR3

515 kW [700 hp]

SYSTEME DE REFROIDISSEMENT *COOLING SYSTEM*

Débit - liquide de refroidissement *Coolant circulation pump flow*	l/min	335 à 580
	gal US/min	88.5 to 153.2
Débit - eau brute (Pompe rotor caoutchouc) *Raw water pump flow (Rubber Impeller Pump))*	l/min	295
	gal US/min	77.9
Chaleur total dégagée à puissance nominale *Total heat rejection at rated speed*	kW	393
	BTU/min	22350
Capacité liquide de refroidissement *Total coolant capacity*	l	40
	gal US	10.6
Thermostat, début d'ouverture *Thermostat, start open at*	°C	80 / 87
	°F	176 / 189
Thermostat, ouverture complète *Thermostat, fully open at*	°C	90 / 95
	°F	194 / 203

SYSTEME D'ECHAPPEMENT *EXHAUST SYSTEM*

Débit de gaz d'échappement *Exhaust gas flow*	kg/min	49
Contre-pression maxi admissible dans le circuit d'échappement *Permitted back pressure in the exhaust line*	bar	0.1
	inH^2O	40.15
Température d'échappement maxi *Maximum exhaust temperature*	°C	471
	°F	879.8

SYSTEME D'ADMISSION *AIR INTAKE SYSTEM*

Consommation d'air du moteur à 25°C *Engine air consumption at 25°C*	kg/min	47
Température d'air d'admission maxi admissible *Maximum allowance intake air temperature*	°C	30
	°F	86
Différence maxi de T° - Ambiant/air d'admission *Maximum temperature rise - ambient to engine inlet*	°C	10
	°F	50
Air d'admission - Résistance maxi admissible, filtre à air propre *Maximum air intake restriction, Clean air filter*	kPa	3
	inH^2O	12.04
Air d'admission - Résistance maxi admissible, filtre à air sale *Maximum air intake restriction, Durty air filter*	kPa	6.5
	inH^2O	26.1
Pression de suralimentation *Boost pressure*	bar	2.1
	psi	30.46

N13.700 CR3

515 kW [700 cv]

SYSTEME ELECTRIQUE *ELECTRICAL SYSTEM*

Alternateur *Alternator*	Tension *Voltage*	V	24
	Ampère *Amperes*	A	100
Démarreur électrique *Electric starter motor*		kW	7
Batterie - Courant de démarrage à froid minimum *Battery, minimum cold start current*		CCA	800
Batterie recommandée K20 *Recommanded batterie K20*		A/h	160

POIDS A SEC *DRY WEIGHT*

Poids sans transmission *Weight without transmission*	kg	1285
	lbs	2832.9

CONSEILS D'INSTALLATION *INSTALLATION TIPS*

Diamètre tuyau alimentation carburant *Fuel line supply diameter*	mm	12
	in	0.47
Diamètre tuyau retour carburant *Fuel line return diameter*	mm	12
	in	0.47
Diamètre Tuyau eau de mer *Sea water line diameter*	mm	50
	in	1.97
Diamètre ligne d'échappement *Exhaust line diameter*		en accord avec l'installation : voir contrepression *according to the installation : see back pressure*

CONSEILS D'UTILISATION *RATINGS*

Classe d'application *Rating*	M5.L (M6.S)
Service *Operating hours*	*Jusqu'à 2000 heures par an (Jusqu'à 500 heures par an)* *Up to 2000 hours per year (Up to 500 hours per year)*
Facteur de charge *Load Factor*	Jusqu'à 77% (Jusqu'à 50%) *Up to 77% (Up to 50%)*
Cycle d'utilisation *Duty Cycle*	Utilisation de la puissance maximale au maximum 1 heure toutes les 6 heures (1 heure toutes les 12 heures) de fonctionnement. Le temps d'utilisation restant sans dépasser le régime de croisière. *Full power for no more than 1 hour out of each 6 hours (1 hour out of each 12 hours) of operation. The remaining operation time must be at or below cruising speed.*

NANNI INDUSTRIES S.A.S.
11, Avenue Mariotte - Zone Industrielle
33260 La Teste - France
Tel: +33 (0)5 56 22 30 60
Fax: +33 (0)5 56 22 30 79

Technical data according to ISO 8665. This document is not contractual. Nanni reserves the right to modify any of the characteristics stated in this document without notice, in a constant effort to improve the quality of its products. Images and illustrations may shown non standard equipements. All combination of equipment & accessory are not available.

N13.750 CR3

FICHE TECHNIQUE *DATA SHEET*

CARACTÉRISTIQUES GÉNÉRALES *GENERAL DATA*

Base moteur *Engine Base*		Scania
Configuration *Configuration*		6 cylindres en ligne *6 cylinders in line*
Type *Type*		4 temps Diesel *4 strokes Diesel*
Nombre de soupapes par cylindre *N° of vales per cylinder*		4
Taux de compression *Compression Ratio*		17.3 : 1
Admission *Air intake*		Turbocompresseur avec isolation thermique *Turbocharged with heat insulated*
Distribution *Valve train*		Distribution par pignons *Gear driven valve train*
Système d'injection *Fuel system*		Injection Rampe Commune (XPI) *Common Rail Injection (XPI)*
Ordre d'allumage *Firing order*		1 - 5 - 3 - 6 - 2 - 4
Sens de rotation (vue côté volant moteur) *Rotational direction (view flywheel side)*		Antihoraire *Counter clockwise*
Cylindrée *Displacement*	liltres	12.7
	in³	775
Alésage *Bore*	mm	130
	in	5.1
Course *Stroke*	mm	160
	in	6.3
Régime de ralenti *Idling speed*	tr/min *rpm*	600
Régime nominal *Rated speed*	tr/min *rpm*	2300
Régime maxi coupure régulateur *High speed governor break point*	tr/min *rpm*	2350
Nombres d'émissions *Emission compliance*		IMO Tier II
		US Tier 3
		EU Stage IIIA

SYSTEME DE LUBRIFICATION *LUBRICATION SYSTEM*

Pression d'huile au ralenti *Oil pressure @ idle speed*	bar	0.7
	psi	10.2

N13.750 CR3
552 kW [750 hp]

SYSTEME DE LUBRIFICATION (suite) *LUBRICATION SYSTEM (continued)*

Pression d'huile au régime nominal *Oil pressure @ rated speed*		bar	3 / 6
		psi	43.5 / 87.0
Capacité d'huile sans filtre, angle 0° *Oil quantity excluding filter @ 0° angle*		litres	34
		gal US	9
Angle d'installation maxi admissible *Maximum permitted installed tilt*	volant vers le bas *front down*	°	12
	volant vers le haut *front up*	°	12
	volant lateral *lateral*		12
Inclinaison admissible en fonctionnement intermittent *Maximum permitted intermittent*	maxi *tilt*	°	25
	latéral maxi *side tilt*	°	30

PERFORMANCE *PERFORMANCE*

Régime de rotation du vilebrequin ***RPM @ cranckshaft***	**tr/min** ***rpm***	**600**	**1200**	**1500**	**1600**	**1800**	**2100**	**2300**
Couple au vilbrequin *Torque @ cranckshaft*	Nm	1126	2578	3069	3109	2838	2510	2292
	ft-lb	830	1901	2264	2293	2093	1851	1690
Puissance au vilebrequin *Power @ cranckshaft*	hp	96	441	656	709	728	751	751
	Kw	71	324	482	521	535	552	552
Puissance à l'hélice calculée pour charge exp.2.5 *Power at calculated propeller load exp.2.5*	hp	26	148	258	303	407	598	751
	Kw	19	109	190	223	299	440	515

SYSTEME D'INJECTION *FUEL SYSTEM*

Régime de rotation au vilebrequin ***RPM @ cranckshaft***	**tr/min** **rpm**	**600**	**1200**	**1500**	**1600**	**1800**	**2100**	**2300**
Consommation spécifique de carburant *Specific fuel consumption*	g/kWh	219	209	196	196	197	212	215
Consommation de carburant charge exp.2.5 *Fuel consumption propeller load exp.2.5*	l/h	6	26	47	56	75	114	142
	gal US/h	1.6	6.9	12.4	14.8	19.8	30.1	37.5
Consommation de carburant à pleine charge *Fuel consumption at full load*	l/h				142			
	gal US/h				37.5			
Débit volumique de carburant à pleine charge *Total volumetric fuel flow at full load*	l/h				180			
	gal US/h				45.6			
Restriction maximale d'admission de carburant *Maximum fuel inlet restriction*	kPa				30			
	psi				4.4			
Résistance maxi au passage du carburant *Maximum permitted fuel inlet pressure*	kPa				35			
	psi				5.1			
Pression maxi admissible *Maximum permitted fuel return pressure*	kPa				35			
	psi				5.1			

N13.750 CR3

552 kW [750 hp]

SYSTEME DE REFROIDISSEMENT *COOLING SYSTEM*

Débit - liquide de refroidissement *Coolant circulation pump flow*	l/min	335 à 580
	gal US/min	88.5 to 153.2
Débit - eau brute (Pompe rotor caoutchouc) *Raw water pump flow (Rubber Impeller Pump)*	l/min	295
	gal US/min	77.9
Chaleur total dégagée à puissance nominale *Total heat rejection at rated speed*	kW	416
	BTU/min	23658
Capacité liquide de refroidissement *Total coolant capacity*	l	40
	gal US	10.6
Thermostat, début d'ouverture *Thermostat, start open at*	°C	80 / 87
	°F	176 / 189
Thermostat, ouverture complète *Thermostat, fully open at*	°C	90 / 95
	°F	194 / 203

SYSTEME D'ECHAPPEMENT *EXHAUST SYSTEM*

Débit de gaz d'échappement *Exhaust gas flow*	kg/min	49
Contre-pression maxi admissible dans le circuit d'échappement *Permitted back pressure in the exhaust line*	bar	0.1
	inH^2O	40.15
Température d'échappement maxi *Maximum exhaust temperature*	°C	507
	°F	944.6

SYSTEME D'ADMISSION *AIR INTAKE SYSTEM*

Consommation d'air du moteur à 25°C *Engine air consumption at 25°C*	kg/min	47.2
Température d'air d'admission maxi admissible *Maximum allowance intake air temperature*	°C	30
	°F	86
Différence maxi de T° - Ambiant/air d'admission *Maximum temperature rise - ambient to engine inlet*	°C	10
	°F	50
Air d'admission - Résistance maxi admissible, filtre à air propre *Maximum air intake restriction, Clean air filter*	kPa	3
	inH^2O	12.04
Air d'admission - Résistance maxi admissible, filtre à air sale *Maximum air intake restriction, Durty air filter*	kPa	6.5
	inH^2O	26.1
Pression de suralimentation *Boost pressure*	bar	2.1
	psi	30.46

N13.750 CR3

552 kW [750 cv]

SYSTEME ELECTRIQUE *ELECTRICAL SYSTEM*

Alternateur *Alternator*	Tension *Voltage*	V	24
	Ampère *Amperes*	A	100
Démarreur électrique *Electric starter motor*		kW	7
Batterie - Courant de démarrage à froid minimum *Battery, minimum cold start current*		CCA	800
Batterie recommandée K20 *Recommanded batterie K20*		A/h	160

POIDS A SEC *DRY WEIGHT*

Poids sans transmission *Weight without transmission*	kg	1285
	lbs	2832.9

CONSEILS D'INSTALLATION *INSTALLATION TIPS*

Diamètre tuyau alimentation carburant *Fuel line supply diameter*	mm	12
	in	0.47
Diamètre tuyau retour carburant *Fuel line return diameter*	mm	12
	in	0.47
Diamètre Tuyau eau de mer *Sea water line diameter*	mm	50
	in	1.97
Diamètre ligne d'échappement *Exhaust line diameter*		En accord avec l'installation : voir contre pression *According to the installation : see back pressure*

CONSEILS D'UTILISATION *RATINGS*

Classe d'application *Rating*	M5.L (M6.S)
Service *Operating hours*	*Jusqu'à 2000 heures par an (Jusqu'à 500 heures par an)* *Up to 2000 hours per year (Up to 500 hours per year)*
Facteur de charge *Load Factor*	Jusqu'à 77% (Jusqu'à 50%) *Up to 77% (Up to 50%)*
Cycle d'utilisation *Duty Cycle*	Utilisation de la puissance maximale au maximum 1 heure toutes les 6 heures (1 heure toutes les 12 heures) de fonctionnement. Le temps d'utilisation restant sans dépasser le régime de croisière. *Full power for no more than 1 hour out of each 6 hours (1 hour out of each 12 hours) of operation. The remaining operation time must be at or below cruising speed.*

NANNI INDUSTRIES S.A.S.
11, Avenue Mariotte - Zone Industrielle
33260 La Teste - France
Tel: +33 (0)5 56 22 30 60
Fax: +33 (0)5 56 22 30 79

Technical data according to ISO 8665. This document is not contractual. Nanni reserves the right to modify any of the characteristics stated in this document without notice, in a constant effort to improve the quality of its products. Images and illustrations may shown non standard equipements. All combination of equipment & accessory are not available.

DFRGBT02053

N13.800 CR3

FICHE TECHNIQUE *DATA SHEET*

CARACTÉRISTIQUES GÉNÉRALES *GENERAL DATA*

Base moteur *Engine Base*		Scania
Configuration *Configuration*		6 cylindres en ligne *6 cylinders in line*
Type *Type*		4 temps Diesel *4 strokes Diesel*
Nombre de soupapes par cylindre *N° of vales per cylinder*		4
Taux de compression *Compression Ratio*		17.3 : 1
Admission *Air intake*		Turbocompresseur avec isolation thermique *Turbocharged with heat insulated*
Distribution *Valve train*		Distribution par pignons *Gear driven valve train*
Système d'injection *Fuel system*		Injection Rampe Commune (XPI) *Common Rail Injection (XPI)*
Ordre d'allumage *Firing order*		1 - 5 - 3 - 6 - 2 - 4
Sens de rotation (vue côté volant moteur) *Rotational direction (view flywheel side)*		Antihoraire *Counter clockwise*
Cylindrée *Displacement*	liltres	12.7
	in³	775
Alésage *Bore*	mm	130
	in	5.1
Course *Stroke*	mm	160
	in	6.3
Régime de ralenti *Idling speed*	tr/min *rpm*	600
Régime nominal *Rated speed*	tr/min *rpm*	2300
Régime maxi coupure régulateur *High speed governor break point*	tr/min *rpm*	2350
Nombres d'émissions *Emission compliance*		IMO Tier II
		US Tier 3
		EU Stage IIIA

SYSTEME DE LUBRIFICATION *LUBRICATION SYSTEM*

Pression d'huile au ralenti *Oil pressure @ idle speed*	bar	0.7
	psi	10.2

N13.800 CR3
588 kW [800 hp]

SYSTEME DE LUBRIFICATION (suite) *LUBRICATION SYSTEM (continued)*

Pression d'huile au régime nominal *Oil pressure @ rated speed*		bar	3 / 6
		psi	43.5 / 87.0
Capacité d'huile sans filtre, angle 0° *Oil quantity excluding filter @ 0° angle*		litres	34
		gal US	9
Angle d'installation maxi admissible *Maximum permitted installed tilt*	volant vers le bas *front down*	°	12
	volant vers le haut *front up*	°	12
	volant lateral *lateral*		12
Inclinaison admissible en fonctionnement intermittent *Maximum permitted intermittent*	maxi *tilt*	°	25
	latéral maxi *side tilt*	°	30

PERFORMANCE *PERFORMANCE*

Régime de rotation du vilebrequin ***RPM @ cranckshaft***	**tr/min** ***rpm***	**600**	**1200**	**1500**	**1600**	**1800**	**2100**	**2300**
Couple au vilbrequin *Torque @ cranckshaft*	Nm	1126	2578	3069	3127	3050	2674	2441
	ft-lb	830	1901	2264	2306	2250	1972	1800
Puissance au vilebrequin *Power @ cranckshaft*	hp	96	441	656	713	762	800	800
	Kw	71	324	482	524	560	588	588
Puissance à l'hélice calculée pour charge exp.2.5 *Power at calculated propeller load exp.2.5*	hp	28	157	275	323	433	637	800
	Kw	20	116	202	237	319	468	588

SYSTEME D'INJECTION *FUEL SYSTEM*

Régime de rotation au vilebrequin ***RPM @ cranckshaft***	**tr/min** **rpm**	**600**	**1200**	**1500**	**1600**	**1800**	**2100**	**2300**
Consommation spécifique de carburant *Specific fuel consumption*	g/kWh	219	209	196	196	198	211	217
Consommation de carburant charge exp.2.5 *Fuel consumption propeller load exp.2.5*	l/h	6	28	50	59	79	121	152
	gal US/h	1.6	7.4	13.2	15.6	20.9	32	40.2
Consommation de carburant à pleine charge *Fuel consumption at full load*	l/h				152			
	gal US/h				40.2			
Débit volumique de carburant à pleine charge *Total volumetric fuel flow at full load*	l/h				180			
	gal US/h				45.6			
Restriction maximale d'admission de carburant *Maximum fuel inlet restriction*	kPa				30			
	psi				4.4			
Résistance maxi au passage du carburant *Maximum permitted fuel inlet pressure*	kPa				35			
	psi				5.1			
Pression maxi admissible *Maximum permitted fuel return pressure*	kPa				35			
	psi				5.1			

N13.800 CR3

588 kW [800 hp]

SYSTEME DE REFROIDISSEMENT *COOLING SYSTEM*

Débit - liquide de refroidissement *Coolant circulation pump flow*	l/min	335 à 580
	gal US/min	88.5 to 153.2
Débit - eau brute (Pompe rotor caoutchouc) *Raw water pump flow (Rubber Impeller Pump)*	l/min	295
	gal US/min	77.9
Chaleur total dégagée à puissance nominale *Total heat rejection at rated speed*	kW	474
	BTU/min	26956
Capacité liquide de refroidissement *Total coolant capacity*	l	40
	gal US	10.6
Thermostat, début d'ouverture *Thermostat, start open at*	°C	80 / 87
	°F	176 / 189
Thermostat, ouverture complète *Thermostat, fully open at*	°C	90 / 95
	°F	194 / 203

SYSTEME D'ECHAPPEMENT *EXHAUST SYSTEM*

Débit de gaz d'échappement *Exhaust gas flow*	kg/min	50
Contre-pression maxi admissible dans le circuit d'échappement *Permitted back pressure in the exhaust line*	bar	0.1
	inH^2O	40.15
Température d'échappement maxi *Maximum exhaust temperature*	°C	543
	°F	1009.4

SYSTEME D'ADMISSION *AIR INTAKE SYSTEM*

Consommation d'air du moteur à 25°C *Engine air consumption at 25°C*	kg/min	47.4
Température d'air d'admission maxi admissible *Maximum allowance intake air temperature*	°C	30
	°F	86
Différence maxi de T° - Ambiant/air d'admission *Maximum temperature rise - ambient to engine inlet*	°C	10
	°F	50
Air d'admission - Résistance maxi admissible, filtre à air propre *Maximum air intake restriction, Clean air filter*	kPa	3
	inH^2O	12.04
Air d'admission - Résistance maxi admissible, filtre à air sale *Maximum air intake restriction, Durty air filter*	kPa	6.5
	inH^2O	26.1
Pression de suralimentation *Boost pressure*	bar	2.2
	psi	31.91

N13.800 CR3

588 kW [800 cv]

SYSTEME ELECTRIQUE *ELECTRICAL SYSTEM*

Alternateur *Alternator*	Tension *Voltage*	V	24
	Ampère *Amperes*	A	100
Démarreur électrique *Electric starter motor*		kW	7
Batterie - Courant de démarrage à froid minimum *Battery, minimum cold start current*		CCA	800
Batterie recommandée K20 *Recommanded batterie K20*		A/h	160

POIDS A SEC *DRY WEIGHT*

Poids sans transmission *Weight without transmission*	kg	1285
	lbs	2832.9

CONSEILS D'INSTALLATION *INSTALLATION TIPS*

Diamètre tuyau alimentation carburant *Fuel line supply diameter*	mm	12
	in	0.47
Diamètre tuyau retour carburant *Fuel line return diameter*	mm	12
	in	0.47
Diamètre Tuyau eau de mer *Sea water line diameter*	mm	50
	in	1.97
Diamètre ligne d'échappement *Exhaust line diameter*		en accord avec l'installation : voir contrepression *according to the installation : see back pressure*

CONSEILS D'UTILISATION *RATINGS*

Classe d'application *Rating*	M5.L (M6.S)
Service *Operating hours*	*Jusqu'à 2000 heures par an (Jusqu'à 500 heures par an)* *Up to 2000 hours per year (Up to 500 hours per year)*
Facteur de charge *Load Factor*	Jusqu'à 77% (Jusqu'à 50%) *Up to 77% (Up to 50%)*
Cycle d'utilisation *Duty Cycle*	Utilisation de la puissance maximale au maximum 1 heure toutes les 6 heures (1 heure toutes les 12 heures) de fonctionnement. Le temps d'utilisation restant sans dépasser le régime de croisière. *Full power for no more than 1 hour out of each 6 hours (1 hour out of each 12 hours) of operation. The remaining operation time must be at or below cruising speed.*

NANNI INDUSTRIES S.A.S.
11, Avenue Mariotte - Zone Industrielle
33260 La Teste - France
Tel: +33 (0)5 56 22 30 60
Fax: +33 (0)5 56 22 30 79

Technical data according to ISO 8665. This document is not contractual. Nanni reserves the right to modify any of the characteristics stated in this document without notice, in a constant effort to improve the quality of its products. Images and illustrations may shown non standard equipements. All combination of equipment & accessory are not available.

N13.930 CR3

FICHE TECHNIQUE *DATA SHEET*

CARACTÉRISTIQUES GÉNÉRALES *GENERAL DATA*

Base moteur *Engine Base*		Scania
Configuration *Configuration*		6 cylindres en ligne *6 cylinders in line*
Type *Type*		4 temps Diesel *4 strokes Diesel*
Nombre de soupapes par cylindre *N° of vales per cylinder*		4
Taux de compression *Compression Ratio*		17.3 : 1
Admission *Air intake*		Turbocompresseur avec isolation thermique *Turbocharged with heat insulated*
Distribution *Valve train*		Distribution par pignons *Gear driven valve train*
Système d'injection *Fuel system*		Injection Rampe Commune (XPI) *Common Rail Injection (XPI)*
Ordre d'allumage *Firing order*		1 - 5 - 3 - 6 - 2 - 4
Sens de rotation (vue côté volant moteur) *Rotational direction (view flywheel side)*		Antihoraire *Counter clockwise*
Cylindrée *Displacement*	liltres	12.7
	in³	775
Alésage *Bore*	mm	130
	in	5.1
Course *Stroke*	mm	160
	in	6.3
Régime de ralenti *Idling speed*	tr/min *rpm*	600
Régime nominal *Rated speed*	tr/min *rpm*	2300
Régime maxi coupure régulateur *High speed governor break point*	tr/min *rpm*	2350
Nombres d'émissions *Emission compliance*		IMO Tier II
		EU Stage IIIA

SYSTEME DE LUBRIFICATION *LUBRICATION SYSTEM*

Pression d'huile au ralenti *Oil pressure @ idle speed*	bar	0.7
	psi	10.2

N13.930 CR3
680 kW [925 hp]

SYSTEME DE LUBRIFICATION (suite) *LUBRICATION SYSTEM (continued)*

Pression d'huile au régime nominal *Oil pressure @ rated speed*		bar	3 / 6
		psi	43.5 / 87.0
Capacité d'huile sans filtre, angle 0° *Oil quantity excluding filter @ 0° angle*		litres	34
		gal US	9
Angle d'installation maxi admissible *Maximum permitted installed tilt*	volant vers le bas *front down*	°	12
	volant vers le haut *front up*	°	12
	volant lateral *lateral*		12
Inclinaison admissible en fonctionnement intermittent *Maximum permitted intermittent*	maxi *tilt*	°	25
	latéral maxi *side tilt*	°	30

PERFORMANCE *PERFORMANCE*

Régime de rotation du vilebrequin ***RPM @ cranckshaft***	**tr/min** ***rpm***	**600**	**1200**	**1500**	**1700**	**1800**	**2100**	**2300**
Couple au vilbrequin *Torque @ cranckshaft*	Nm	1126	2153	3090	3140	3132	3092	2823
	ft-lb	830	1588	2279	2316	2310	2281	2082
Puissance au vilebrequin *Power @ cranckshaft*	hp	97	441	659	760	802	925	925
	Kw	71	324	485	559	590	680	680
Puissance à l'hélice calculée pour charge exp.2.5 *Power at calculated propeller load exp.2.5*	hp	32	182	318	434	501	737	925
	Kw	24	134	234	319	368	542	680

SYSTEME D'INJECTION *FUEL SYSTEM*

Régime de rotation au vilebrequin ***RPM @ cranckshaft***	**tr/min** **rpm**	**600**	**1200**	**1500**	**1700**	**1800**	**2100**	**2300**
Consommation spécifique de carburant *Specific fuel consumption*	g/kWh	220	212	196	194	196	208	213
Consommation de carburant charge exp.2.5 *Fuel consumption propeller load exp.2.5*	l/h	7	32	57	77	88	134	173
	gal US/h	1.8	8.5	15.1	20.3	23.3	35.4	45.7
Consommation de carburant à pleine charge *Fuel consumption at full load*	l/h				173			
	gal US/h				45.7			
Débit volumique de carburant à pleine charge *Total volumetric fuel flow at full load*	l/h				180			
	gal US/h				45.6			
Restriction maximale d'admission de carburant *Maximum fuel inlet restriction*	kPa				30			
	psi				4.4			
Résistance maxi au passage du carburant *Maximum permitted fuel inlet pressure*	kPa				35			
	psi				5.1			
Pression maxi admissible *Maximum permitted fuel return pressure*	kPa				35			
	psi				5.1			

N13.930 CR3

680 kW [925 hp]

SYSTEME DE REFROIDISSEMENT *COOLING SYSTEM*

Débit - liquide de refroidissement *Coolant circulation pump flow*	l/min	335 à 580
	gal US/min	88.5 to 153.2
Débit - eau brute (Pompe rotor caoutchouc) *Raw water pump flow (Rubber Impeller Pump)*	l/min	295
	gal US/min	77.9
Chaleur total dégagée à puissance nominale *Total heat rejection at rated speed*	kW	440
	BTU/min	25022
Capacité liquide de refroidissement *Total coolant capacity*	l	40
	gal US	10.6
Thermostat, début d'ouverture *Thermostat, start open at*	°C	80 / 87
	°F	176 / 189
Thermostat, ouverture complète *Thermostat, fully open at*	°C	90 / 95
	°F	194 / 203

SYSTEME D'ECHAPPEMENT *EXHAUST SYSTEM*

Débit de gaz d'échappement *Exhaust gas flow*	kg/min	52
Contre-pression maxi admissible dans le circuit d'échappement *Permitted back pressure in the exhaust line*	bar	0.1
	inH^2O	40.15
Température d'échappement maxi *Maximum exhaust temperature*	°C	560
	°F	1040

SYSTEME D'ADMISSION *AIR INTAKE SYSTEM*

Consommation d'air du moteur à 25°C *Engine air consumption at 25°C*	kg/min	49.8
Température d'air d'admission maxi admissible *Maximum allowance intake air temperature*	°C	30
	°F	86
Différence maxi de T° - Ambiant/air d'admission *Maximum temperature rise - ambient to engine inlet*	°C	10
	°F	50
Air d'admission - Résistance maxi admissible, filtre à air propre *Maximum air intake restriction, Clean air filter*	kPa	3
	inH^2O	12.04
Air d'admission - Résistance maxi admissible, filtre à air sale *Maximum air intake restriction, Durty air filter*	kPa	6.5
	inH^2O	26.1
Pression de suralimentation *Boost pressure*	bar	2.4
	psi	34.81

N13.930 CR3

680 kW [925 cv]

SYSTEME ELECTRIQUE *ELECTRICAL SYSTEM*

Alternateur *Alternator*	Tension *Voltage*	V	24
	Ampère *Amperes*	A	100
Démarreur électrique *Electric starter motor*		kW	7
Batterie - Courant de démarrage à froid minimum *Battery, minimum cold start current*		CCA	800
Batterie recommandée K20 *Recommanded batterie K20*		A/h	160

POIDS A SEC *DRY WEIGHT*

Poids sans transmission *Weight without transmission*	kg	1285
	lbs	2832.9

CONSEILS D'INSTALLATION *INSTALLATION TIPS*

Diamètre tuyau alimentation carburant *Fuel line supply diameter*	mm	12
	in	0.47
Diamètre tuyau retour carburant *Fuel line return diameter*	mm	12
	in	0.47
Diamètre Tuyau eau de mer *Sea water line diameter*	mm	50
	in	1.97
Diamètre ligne d'échappement *Exhaust line diameter*		en accord avec l'installation : voir contrepression *according to the installation : see back pressure*

CONSEILS D'UTILISATION *RATINGS*

Classe d'application *Rating*	M6.S
Service *Operating hours*	*Jusqu'à 500 heures par an* *Up to 500 hours per year*
Facteur de charge *Load Factor*	Jusqu'à 50% *Up to 50%*
Cycle d'utilisation *Duty Cycle*	Utilisation de la puissance maximale au maximum 1 heure toutes les 12 heures de fonctionnement. Le temps d'utilisation restant sans dépasser le régime de croisière. *Full power for no more than 1 hour out of each 12 hours of operation. The remaining operation time must be at or below cruising speed.*

NANNI INDUSTRIES S.A.S.
11, Avenue Mariotte - Zone Industrielle
33260 La Teste - France
Tel: +33 (0)5 56 22 30 60
Fax: +33 (0)5 56 22 30 79

Technical data according to ISO 8665. This document is not contractual. Nanni reserves the right to modify any of the characteristics stated in this document without notice, in a constant effort to improve the quality of its products. Images and illustrations may shown non standard equipements. All combination of equipment & accessory are not available.

ENERGY IN BLUE

NANNI INDUSTRIES S.A.S.
11, Avenue Mariotte
33260 La Teste France
Tel: +33 (0)5 56 22 30 60
Fax: +33 (0)5 56 22 30 79
www.nannienergy.com