MARINE

High speed propulsion engines

MAN Engines

MAN MARINE ENGINES

At sea, ships and boats have to contend with elemental forces, while ports require them to navigate precisely through the narrowest of corridors.

Front cover: 2 x D2676 LE456 (2 x 625 kW), image courtesy of Norman Wrights

2 x D2676 LE438 (2 x 412 kW) with SCR and DPF

CONTENTS

MAN Marine Engines

Customer Benefits 4
MAN Service 5
Exhaust Aftertreatment 6
Extended Warranty 12
MAN Genuine Parts 13
24/7 Hotline 14
iSea Engine Electronic 16
Remote Monitoring 18
MAN Smart Hybrid Experience 20

Description of Engines

Light, Medium and Heavy
Duty Operation 22
D2676 24
D2868 32
D2862 38

A RELIABLE DRIVING FORCE

Customer Benefits

- Maximum torque at the most fuel efficient point of operation
- Maximum torque across a large range of engine speed for a powerful and steady acceleration
- Class-leading compactness for a space-saving design
- Best fuel consumption values and long service intervals minimizing the TCO
- Low acoustics and low vibrations
- Worldwide service network – spare parts available within 24 hours
- Continuous 24/7 hotline support around the clock, 365 days a year

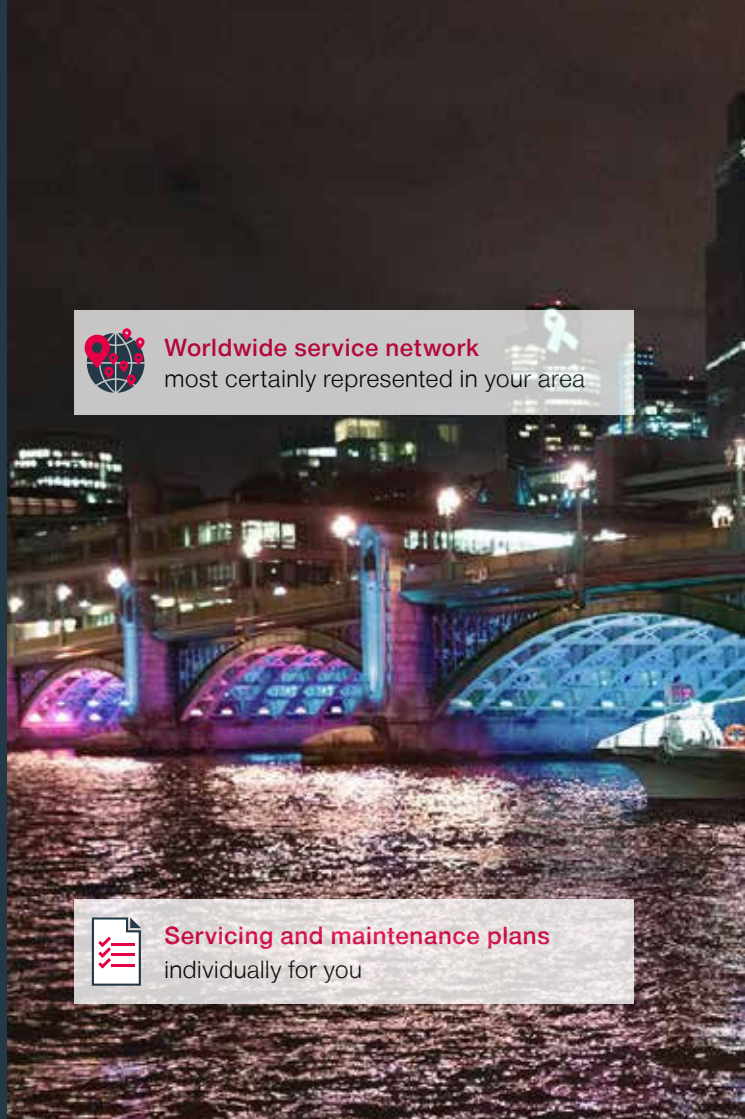

MAN SERVICE FOR NON-STOP OPERATION

Spare parts availability
worldwide available within 24 hours

Extended warranty
up to 5 years with Work PLUS

MAN Customer Service
as back-up from the headquarters

MAN 24/7 Hotline
available 24 hours a day, 365 days a year

MAN Genuine Oil
customised for MAN engines

MAN Engine Academy
for a deeper understandig of engines

EXHAUST AFTERTREATMENT IMO TIER III/EPA TIER 4 (< 1 066 KW) AND EU STAGE V (> 300 KW)

Flexibility makes use of free space – also when it comes to exhaust gas aftertreatment: Individual components of the modular exhaust gas aftertreatment kit from MAN Engines, which can be positioned variably, enable a wide range of installation variants as well as maximum design freedom when installed in machinery and vehicles.

D2676 with SCR

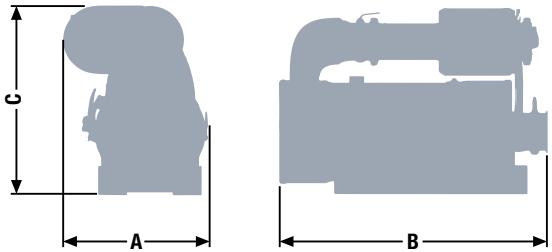

Dimensions

Type designation		SCR system
A-Overall width	mm	555
B-Overall length	mm	950
C-Overall height	mm	663
Average weight of SCR system	kg	115

For detailed examinations of installation dimensions, please order drawings from our factory.

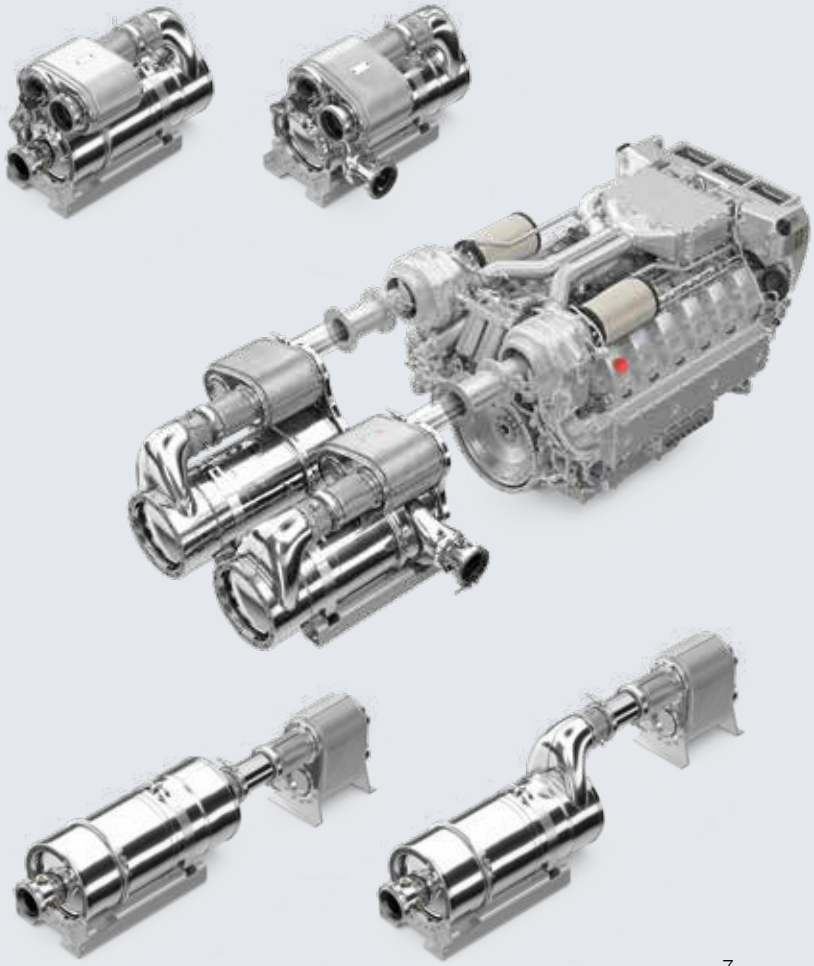

EXHAUST AFTERTREATMENT IMO TIER III (1 140–1 397 KW)

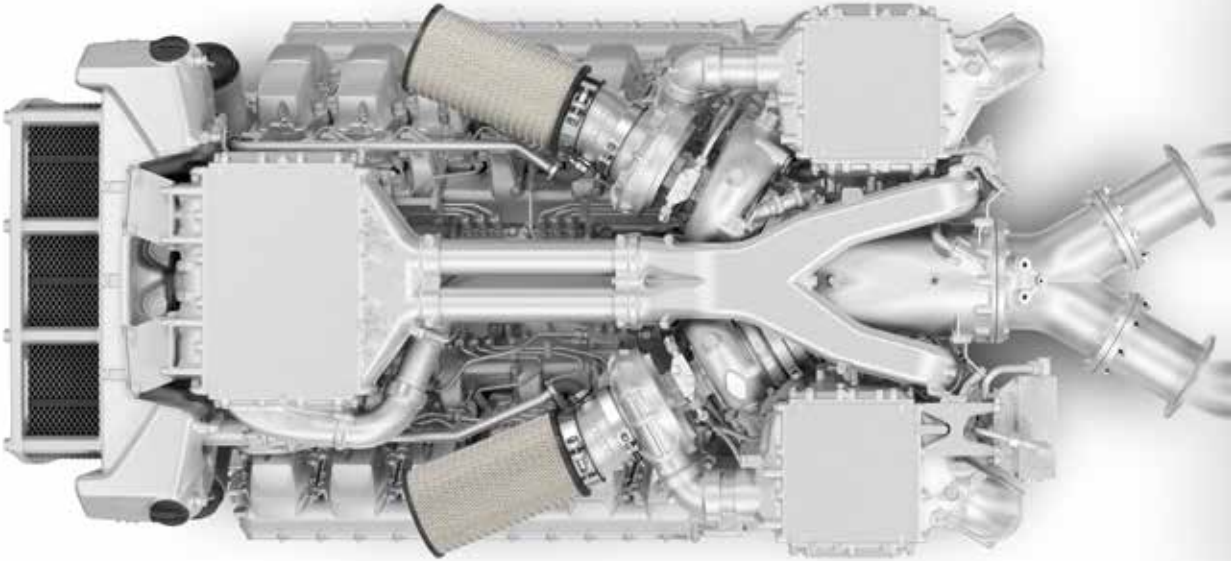

For power ratings between 1 140 and 1 397 kW MAN engines rely on selective catalytic reduction (SCR) only to achieve the emission standards complying with IMO Tier III.

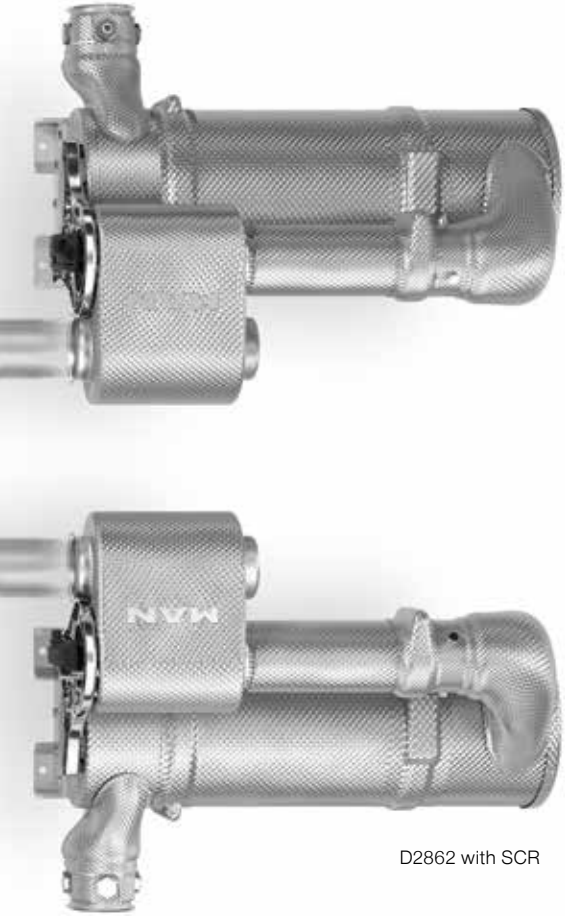

D2862 with SCR

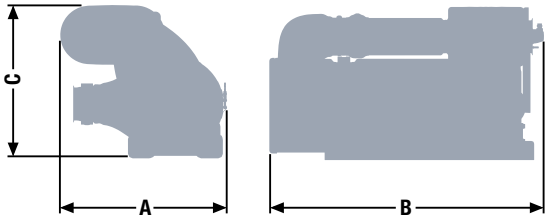

Dimensions IMO Tier III

Type designation		SCR
A-Overall width	mm	669
B-Overall length	mm	1 102
C-Overall height	mm	615
Average weight of SCR system	kg	135

For detailed examinations of installation dimensions, please order drawings from our factory.

EXHAUST AFTERTREATMENT EU STAGE V (> 300 KW)

MAN Engines expands its commercial marine engine portfolio to EU Stage V engines for inland waterway transport in a range from 368 kW (500 PS) to 1,066 kW (1450 PS).
For power ratings above 300 kW MAN Engines relies on selective catalytic reduction (SCR) and diesel particulate filters (DPF) to achieve the emission standards complying with EU Stage V.

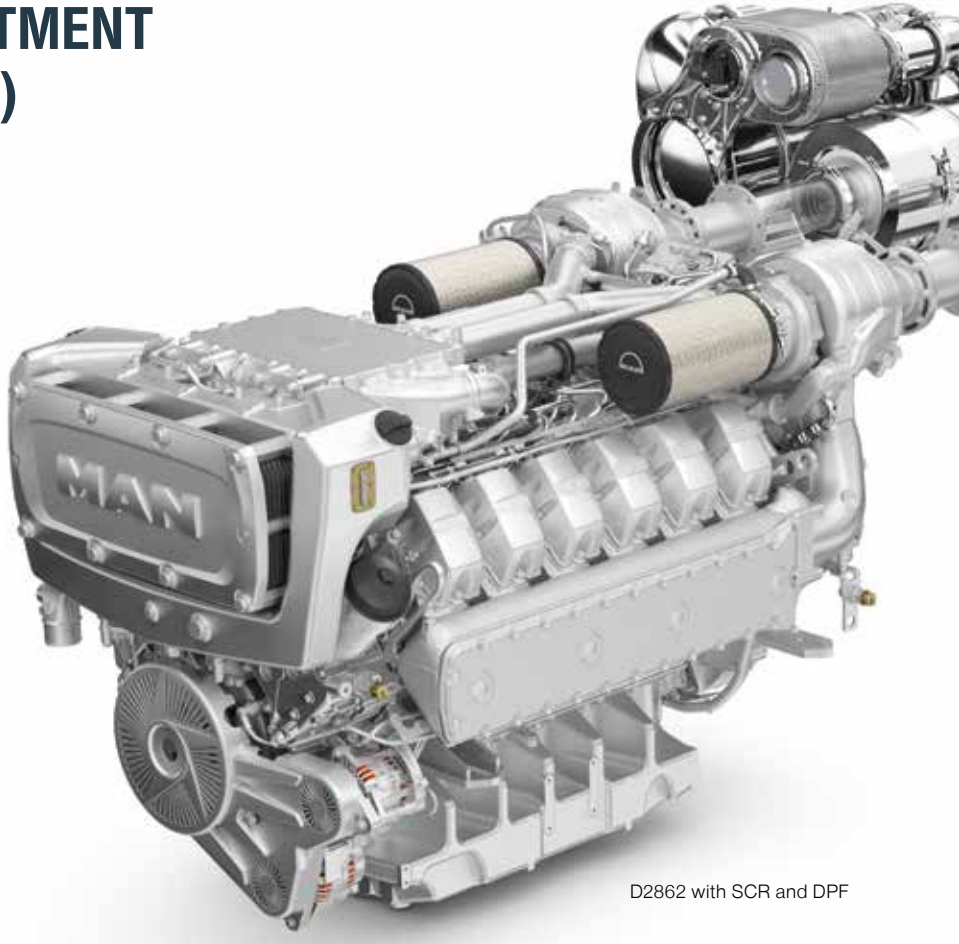

D2862 with SCR and DPF

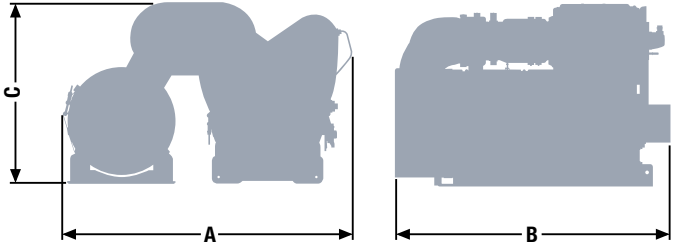

Dimensions EU Stage V

Type designation		SCR + DPF
A-Overall width	mm	960
B-Overall length	mm	950
C-Overall height	mm	620
Average weight of SCR system	kg	180

For detailed examinations of installation dimensions, please order drawings from our factory.

EXTENDED WARRANTY
MORE COMFORT FOR YOUR BUSINESS

Work PLUS warranty extension

All MAN engines for working boats are delivered ex works with a one-year warranty. This warranty is valid for the entire scope of supply from MAN, and is therefore also valid for all engine parts. Wearing parts and components that have to be replaced at regular maintenance intervals are excluded from the warranty.
You have the option of taking out additional coverage for yourself and your investment beyond the one-year warranty: Work PLUS offer you an extension of the warranty by up to two additional years, meaning that the total warranty would be up to 5 years. The operating hours of your engine will depend on the application.

Customer Benefits

- The Work PLUS extensions cover all the MAN components in your engine room, including cost-intensive components such as the electronics and turbo charger
- The transferability of the extension increases the resale value of your vessel
- All maintenance work and repairs are carried out by an authorised MAN service partner
- You can be sure that all servicing and repairs will be performed exclusively using MAN Genuine Parts

! For more information, please contact your local dealer.

MAN GENUINE PARTS AVAILABLE 24/7 AROUND THE WORLD

Of course, the premium quality of your MAN engine is also reflected in high-quality MAN Genuine Parts. And because ‘first class’ doesn’t only apply to our products here at MAN Engines, we ensure that our MAN Genuine Parts are available to you within 24 hours on working days.

Customer Benefits

- High utilization of your ship and flexibility when organising your journeys
- Quick alternative in original manufacturer quality
- Standard two-year warranty on all MAN Genuine Parts and MAN Genuines Parts ecoline
- Delivery to 2,000 shipping addresses in 95 countries

This is made possible by our global service network, external warehouses across all the continents, and the logistics network of our MAN utility vehicles. This round-the-clock availability for MAN Genuine Parts applies to working days, and is for all spare parts for maintenance work on MAN engines for commercial shipping, such as filters, turbochargers, seawater pumps, seals and many more.

Our genuine engines deserve MAN Genuine Parts with two-year warranty and worldwide around-the-clock availability.

24/7 HOTLINE
ALL NIGHT LONG. AND ALL DAY.

With its 24/7 service hotline for marine engines, MAN Engines now provides even easier access to its extensive global service network. Trained employees ensure that an expert service workshop close to you will deal with your concern and will remain in close contact with you.

If your MAN marine engine has a service case, you can receive support by phone right away at the 24/7 hotline with the following telephone numbers. Please have your engine number ready. You can find this on every engine model plate, in your maintenance record and in the registration papers.

NORTH AND LATIN AMERICA:	**+1 754 238 6313***
THE REST OF THE WORLD:	**+49 911 420 420***

* Please note that you may incur costs when ringing the American or German landline number.

Customer Benefits

- Available round the clock, 365 days a year
- Free referral to a MAN service outlet
- Access to almost 500 service stations
- Continuous support until the service case is concluded

iSEA ENGINE ELECTRONIC
EVERYTHING IMPORTANT AT A GLANCE

Intelligent monitoring of engines, gearboxes and exhaust gas aftertreatment on working boats – that's iSea (intelligent surveillance of engines and auxiliaries) from MAN Engines. iSea provides state of the art technology but still looks good – with the optional iSea bridge display. With its numerous connection options and interfaces it is the ideal solution for use on the world's limitless oceans. All the MAN Engines components are perfectly coordinated and intuitively designed. iSea is the future that gives you the best view of the present.

iSea

Throttle lever

A modern classic, the MAN throttle lever for single or multiple engine systems is used in various drive concepts, as well as in hybrid drives.
Different modes can be selected at the push of a button. The MAN throttle lever makes sailing and docking more efficient than ever before.

- A perfectly coordinated system offering excellent fuel savings and system reliability
- Better running properties and increased convenience thanks to ergonomic, high quality operator controls
- Less space required thanks to integration of the controller into the iSea box

Customer Benefits

- Modern multifunction touch screen display (5" or 7")
- Maximum space savings thanks to visualisation of 7 peripherals on a single display: instrumentation, alarm handling, start/stop panel, emergency drive, CAN converter, video screen, digital I/O
- Reduction in number of cables thanks to proven CAN bus wiring

REMOTE MONITORING
NEW POSSIBILITIES WITH iSEA CONNECTIVITY

Retrieve and evaluate all important engine data from anywhere? The optional remote monitoring via the MAN Engines Marine Web Interface shows ship owners and MAN service employees the current status of MAN engines (with iSea engine electronics) on board the customer's own fleet around the clock. Fuel consumption, speeds, emissions, load spectra, alarm lists and snapshots of measurement data are displayed. MAN service employees can also access the diagnostic memory, the alarm history and live measurement data.

Customer Benefits

- Monitoring of fuel consumption, emissions and driving profile to increase efficiency across the entire fleet
- Time and cost-saving initial diagnosis (and troubleshooting if necessary) remotely by MAN service employees
- Additional time savings and reduced downtimes due to the provision of spare parts triggered immediately during the initial diagnosis if required
- Simple and secure remote control in the web browser via secured data connections with maximum data protection

MAN SMART HYBRID EXPERIENCE

Change of Mobility on the Water

MAN Engines is ushering in a new era of zero-emission mobility, maximum performance based on intelligent solutions, and comfortable cruising for marine engines. The modular MAN Smart Hybrid Experience is tailored to your individual needs and wishes and is specifically configured with this in mind.
The ability to flexibly combine conventional marine engines and electric motors with batteries and on-board units opens up countless opportunities for incorporating different degrees of hybrid power in leisure craft as well as commercial applications. Based on the desired operating modes, the MAN hybrid system can focus the driving profiles on performance, comfort or efficiency.

MAN Engines offers you a tailored solution for your specific hybrid needs.

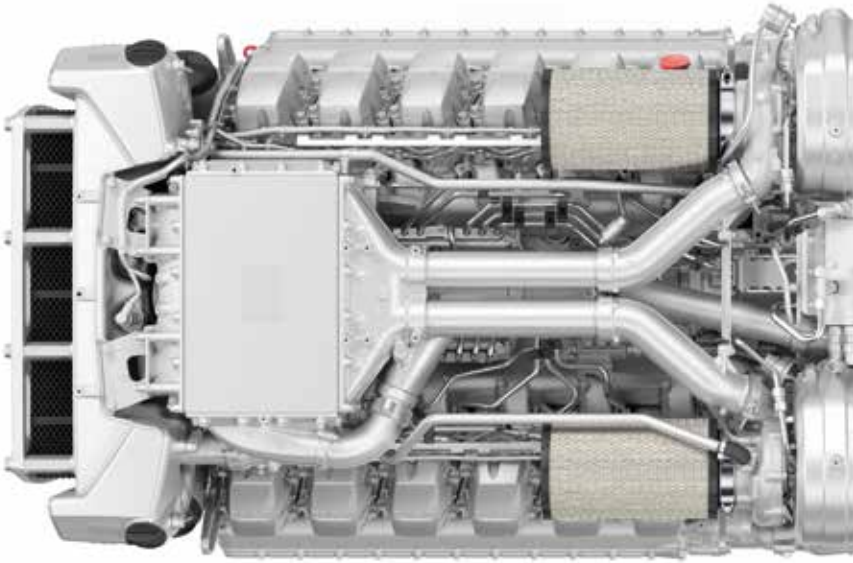

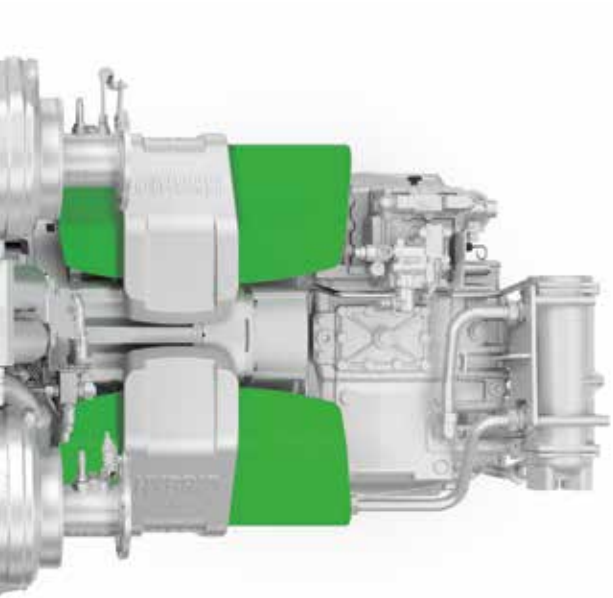

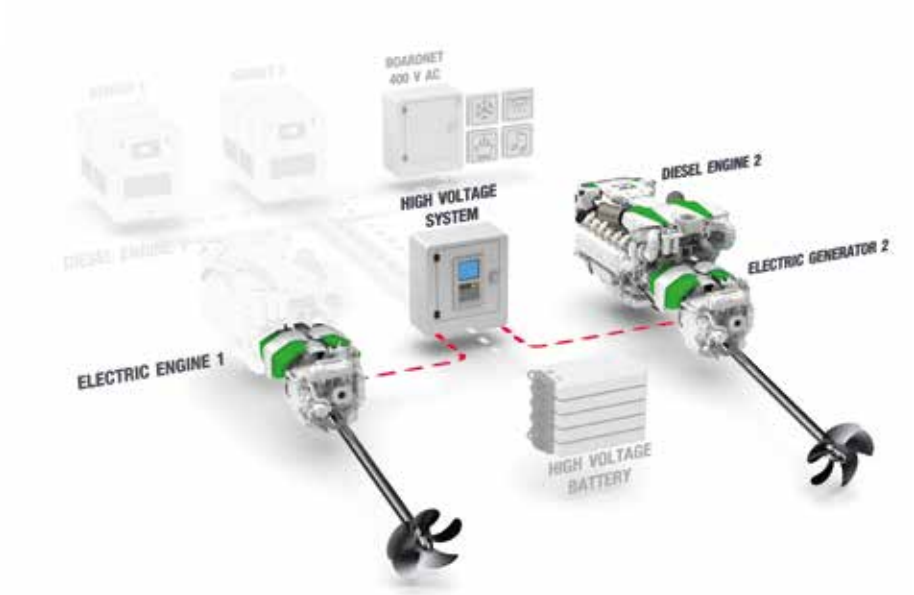

Please get in touch with our numerous operating modes!

LIGHT DUTY

Characteristics

- Annual operating hours: ≤ 1,000
- Percentage of time at full load: ≤ 20 %
- Average load application: ≤ 50 %

Typical applications

- Season fishing
- Escort boats and patrol boats
- Ambulance boats
- Police boats

2 x D2862 LE428 (2 x 749 kW)

2 x D2862 LE456 (2 x 1,213 kW)

MEDIUM DUTY

Characteristics

- Annual operating hours: ≤ 4,000
- Percentage of time at full load: ≤ 60 %
- Average load application: ≤ 70 %

HEAVY DUTY

Characteristics

- Annual operating hours: unlimited
- Percentage of time at full load: ≤ 100 %
- Average load application: ≤ 100 %

Typical applications

- Trawlers
- Tugs and pushboats
- Freight barges and freighters
- Ferries
- Dredgers

Typical applications

- Escort boats and pilot boats
- Fishing boats
- Passenger boats and ferries
- Cruising vessels
- Seagoing patrol boats

2 x D2862 LE435 (2 x 882 kW)

D2676

Characteristics

▪ Cylinders and arrangement:	6 cylinders in-line
▪ Operation mode:	4-stroke diesel engine, watercooled
▪ Turbocharging:	Turbocharger with charge air intercooler and wastegate
▪ Number of valves:	4 valves per cylinder
▪ Fuel system:	Common Rail direct fuel injection with high pressure pump and electronic control
▪ Engine block:	High-strength casting with integrated oil and water ducts and replaceable cylinder liners
▪ Engine lubrication:	Force-feed lubrication, lubrication oil cooler in cooling water circuit of the engine
▪ Type of cooling:	Seawater cooled charge air cooler, plate heat exchanger by rubber impeller pump Optional: external keel cooling
▪ Engine control:	Electronic injection control (EDC) with engine monitoring including diagnostic unit
▪ Fuel:	DIN EN 590

D2676

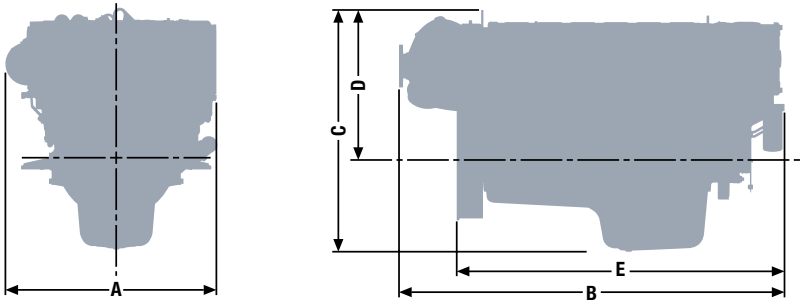

Dimensions

Type designation 421/422		LE 422/425/426/428/432/435/438/43B/446/456/457/471/474/477/47A/484/487/491/494/497
A-Overall width	mm	986
B-Overall length	mm	1,795
C-Overall height – standard oil pan	mm	1,096
D-Top of engine to crankshaft centre	mm	674
E-Length of engine from front end to edge of flywheel housing	mm	1,527
Average weight of engine ready for installation (dry)	kg	1,251

For detailed examinations of installation dimensions, please order drawings from our factory.

2 x D2676 LE477 (2 x 368 kW) with SCR

D2676

Technical features

		Light duty			Medium duty
Type designation		**LE 446**	**LE 426**	**LE 456**	**LE 432**
Displacement	l	12.42	12.42	12.42	12.42
Nominal rating [1]	kW (hp)	537 (730)	588 (800)	625 (850)	412 (560)
Rated speed	rpm	2,300	2,300	2,300	2,100
Maximum torque	Nm	2,450	2,685	2,740	2,065
at speed	rpm	1,300–2,100	1,300–2,100	1,400–2,100	1,300–1,900
Lowest specific fuel consumption [1]	g/kWh	206	207	214	199
Classifiable		✓	–	–	✓
Exhaust gas aftertreatment		–	–	–	–
Exhaust gas status		IMO Tier II, EPA Tier 3, China 2 [2], RCD 2013/53/EC	IMO Tier II, EPA Tier 3, China 2 [2], RCD 2013/53/EC	IMO Tier II, EPA Tier 3 [2], China 2 [2], RCD 2013/53/EC	IMO Tier II

1) Tolerance +5 % according to DIN ISO 3046-1

2) For private use only

Medium duty					
LE 435	**LE 438**	**LE 43B**	**LE 428**	**LE 422**	**LE 425**
12.42	12.42	12.42	12.42	12.42	12.42
412 (560)	412 (560)	412 (560)	441 (600)	478 (650)	478 (650)
2,100	2,100	2,100	2,100	2,100	2,100
2,065	2,075	2,071	2,214	2,402	2,402
1,300–1,900	1,300–1,900	1,400–1,900	1,400–1,900	1,300–1,900	1,300–1,900
207	201	200	201	201	205
✓	✓	✓	✓	✓	✓
–	✓	✓	✓	–	–
IMO Tier II, EPA Tier 3, China 2, RCD 2013/53/EC	IMO Tier III	IMO Tier III, EU Stage V	IMO Tier III	IMO Tier II	IMO Tier II, EPA Tier 3, China 2, RCD 2013/53/EC

D2676

Technical features

		Heavy duty			
Type designation		**LE 457**	**LE 484**	**LE 487**	**LE 491**
Displacement	l	12.42	12.42	12.42	12.42
Nominal rating [1]	kW (hp)	221 (301)	290 (394)	290 (394)	331 (450)
Rated speed	rpm	1,800	1,800	1,800	1,800
Maximum torque	Nm	1,320	1,735	1,760	1,975
at speed	rpm	1,000–1,600	1,200–1,600	1,300–1,600	1,200–1,600
Lowest specific fuel consumption [1] [2]	g/kWh	206	208	200	198
Classifiable		✓	✓	✓	✓
Exhaust gas aftertreatment		✓	–	✓	–
Exhaust gas status		IMO Tier III, EU Stage V	IMO Tier II, EPA Tier 3, RCD 2013/53/EC	IMO Tier III, EU Stage V	IMO Tier II

1) Tolerance +5 % according to DIN ISO 3046-1

2) Consumption at rated power

Heavy duty					
LE 494	**LE 497**	**LE 471**	**LE 474**	**LE 477**	**LE 47A**
12.42	12.42	12.42	12.42	12.42	12.42
331 (450)	331 (450)	368 (500)	368 (500)	368 (500)	368 (500)
1,800	1,800	1,800	1,800	1,800	1,800
1,980	1,980	2,205	2,205	2,185	2,200
1,200–1,600	1,200–1,600	1,300–1,600	1,300–1,600	1,300–1,600	1,400–1,600
208	196	199	207	195	198
✓	✓	✓	✓	✓	✓
–	✓	–	–	✓	✓
IMO Tier II, EPA Tier 3, RCD 2013/53/EC	IMO Tier III	IMO Tier II	IMO Tier II, EPA Tier 3, China 2, RCD 2013/53/EC	IMO Tier III	IMO Tier III, EU Stage V

D2868

Characteristics

▪ Cylinders and arrangement:	8 cylinders in 90° V arrangement
▪ Operation mode:	4-stroke diesel engine, watercooled
▪ Turbocharging:	Turbocharger with charge air intercooler and wastegate (1-stage: D2868 LE 426, 2-stage: D2868 LE 436)
▪ Number of valves:	4 valves per cylinder
▪ Fuel system:	Common Rail direct fuel injection with electronic control
▪ Engine block:	High-strength casting with integrated oil and water ducts and replaceable cylinder liners
▪ Engine lubrication:	Closed system with forced feeding, oil cooling and filtering
▪ Type of cooling:	Plate heat exchanger, seawater cooled Optional: external keel cooling
▪ Engine control:	Electronic injection control (EDC) with engine monitoring including diagnostic unit
▪ Fuel:	DIN EN 590

D2868

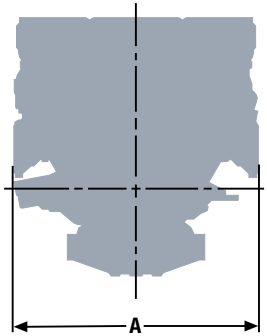

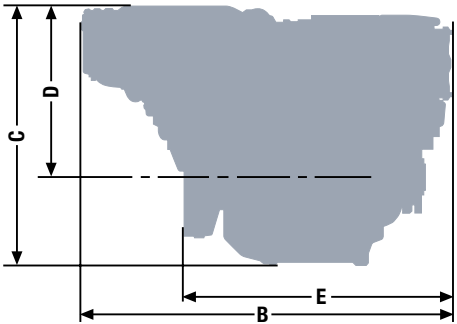

Dimensions

Type designation		LE 425/426/ 431/446	LE 453	LE 436/466
A-Overall width	mm	1,153	1,153	1,153
B-Overall length	mm	1,745	1,745	1,736
C-Overall height – standard oil pan	mm	1,177	1,222	1,222
D-Top of engine to crankshaft centre	mm	765	811	811
E-Length of engine from front end to edge of flywheel housing	mm	1,243	1,262	1,262
Average weight of engine ready for installation (dry)	kg	1,780	1,941	1,941

For detailed examinations of installation dimensions, please order drawings from our factory.

2 x D2868 LE436 (2 x 882 kW)

D2868

Technical features

		Light duty			
Type designation		**LE 426**	**LE 453**	**LE 436**	**LE 466**
Displacement	l	16.16	16.16	16.16	16.16
Nominal rating [1]	kW (hp)	735 (1,000)	824 (1,121)	882 (1,200)	956 (1,300)
Rated speed	rpm	2,300	2,300	2,300	2,300
Maximum torque	Nm	3,345	3,745	4,010	4,350
at speed	rpm	1,400–2,100	1,200–2,100	1,200–2,100	1,300–2,100
Lowest specific fuel consumption [1]	g/kWh	213	202	205	199
Classifiable		–	✓	–	–
Exhaust gas aftertreatment		–	–	–	–
Exhaust gas status		IMO Tier II, China 2 [2], RCD 2013/53/EC	IMO Tier II	IMO Tier II, EPA Tier 3 [2], China 2 [2], RCD 2013/53/EC	IMO Tier II, EPA Tier 3 [2], China 2 [2], RCD 2013/53/EC

1) Tolerance +5 % according to DIN ISO 3046-1

2) For private use only

Medium duty		Heavy duty
LE 425	**LE 446**	**LE 431**
16.16	16.16	16.16
588 (800)	662 (900)	500 (680)
2,100	2,100	1,800
2,955	3,325	3,000
1,400–1,900	1,400–1,900	1,100–1,600
211	214	199
✓	✓	✓
–	–	–
IMO Tier II, EPA Tier 3, China 2, RCD 2013/53/EC	IMO Tier II, China 2, RCD 2013/53/EC	IMO Tier II

D2862

Characteristics

▪ Cylinders and arrangement:	12 cylinders in 90° V arrangement
▪ Operation mode:	4-stroke diesel engine, watercooled
▪ Turbocharging:	Turbocharger with charge air intercooler and wastegate (1-stage: D2862 LE 446/426, 2-stage: D2862 LE 456/436/476/489/483)
▪ Number of valves:	4 valves per cylinder
▪ Fuel system:	Common Rail direct fuel injection with electronic control
▪ Engine block:	High-strength casting with integrated oil and water ducts and replaceable cylinder liners
▪ Engine lubrication:	Closed system with forced feeding, oil cooling and filtering
▪ Type of cooling:	Plate heat exchanger, seawater cooled Optional: external keel cooling
▪ Engine control:	Electronic injection control (EDC) with engine monitoring including diagnostic unit
▪ Fuel:	DIN EN 590

D2862

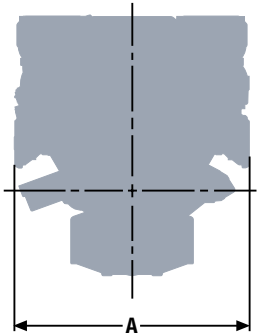

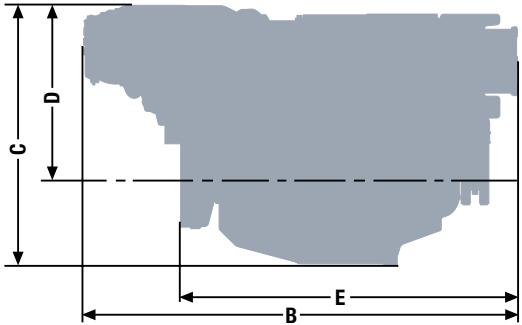

Dimensions

Type designation		LE 424/425/426/ 435/444/446/ 454/466	LE 429/436/439/456/ 459/476/479/483/ 489/48B/496/499	LE 427/428/437/ 438/43B/447/ 44A/469
A-Overall width	mm	1,153	1,153	1,157
B-Overall length	mm	2,130	2,139	1,939
C-Overall height – standard oil pan	mm	1,230	1,272	1,293
D-Top of engine to crankshaft centre	mm	765	808	827
E-Length of engine from front end to edge of flywheel housing	mm	1,630	1,658	1,608
Average weight of engine ready for installation (dry)	kg	2,270	2,420	2,270

For detailed examinations of installation dimensions, please order drawings from our factory.

1 x D2862 LE444 (735 kW)

D2862

Technical features

		Light duty			
Type designation		**LE 446**	**LE 426**	**LE 429**	**LE 456**
Displacement	l	24.24	24.24	24.24	24.24
Nominal rating [1]	kW (hp)	1,029 (1,400)	1,140 (1,550)	1,140 (1,550)	1,213 (1,650)
Rated speed	rpm	2,300	2,300	2,300	2,300
Maximum torque	Nm	4,680	5,185	5,180	5,510
at speed	rpm	1,200–2,100	1,200–2,100	1,200–2,100	1,200–2,100
Lowest specific fuel consumption [1]	g/kWh	203	203	199	201
Classifiable		✓	–	–	✓
Exhaust gas aftertreatment		–	–	✓	–
Exhaust gas status		IMO Tier II, EPA Tier 3 [2], China 2 [2], RCD 2013/53/EC	IMO Tier II, EPA Tier 3 [2], China 2 [2], RCD 2013/53/EC	IMO Tier III, EPA Tier 3 [2]	IMO Tier II, EPA Tier 3 [2], China 2, RCD 2013/53/EC

1) Tolerance +5 % according to DIN ISO 3046-1

2) For private use only

	Light duty					
LE 459	**LE 436**	**LE 439**	**LE 476**	**LE 479**	**LE 496**	**LE 499**
24.24	24.24	24.24	24.24	24.24	24.24	24.24
1,213 (1,650)	1,324 (1,800)	1,324 (1,800)	1,397 (1,900)	1,397 (1,900)	1,471 (2,000)	1,471 (2,000)
2,300	2,300	2,300	2,300	2,300	2,300	2,300
5,518	6,010	6,010	6,130	6,185	6,460	6,508
1,200–2,100	1,200–2,100	1,200–2,100	1,200–2,100	1,200–2,100	1,200–2,100	1,200–2,100
198	200	197	200	197	199	197
✓	–	–	–	–	–	–
✓	–	✓	–	✓	–	✓
IMO Tier III, EPA Tier 3 [2]	IMO Tier II, EPA Tier 3 [2], China 2 [2], RCD 2013/53/EC	IMO Tier III, EPA Tier 3 [2]	IMO Tier II, EPA Tier 3 [2], China 2 [2], RCD 2013/53/EC	IMO Tier III, EPA Tier 3 [2]	IMO Tier II, EPA Tier 3 [2], China 2 [2], RCD 2013/53/EC	IMO Tier III, EPA Tier 3 [2]

D2862

Technical features

		Medium duty			
Type designation		**LE 425**	**LE 428**	**LE 435**	**LE 438**
Displacement	l	24.24	24.24	24.24	24.24
Nominal rating [1]	kW (hp)	749 (1,019)	749 (1,019)	882 (1,200)	882 (1,200)
Rated speed	rpm	2,100	2,100	2,100	2,100
Maximum torque	Nm	3,765	3,750	4,435	4,440
at speed	rpm	1,200–1,900	1,300–1,900	1,300–1,900	1,400–1,900
Lowest specific fuel consumption [1]	g/kWh	203	199	200	197
Classifiable		✓	✓	✓	✓
Exhaust gas aftertreatment		–	✓	–	✓
Exhaust gas status		IMO Tier II, China 2, RCD 2013/53/EC	IMO Tier III, EPA Tier 4	IMO Tier II, China 2, RCD 2013/53/EC	IMO Tier III, EPA Tier 4

1) Tolerance +5 % according to DIN ISO 3046-1

Medium duty					
LE 43B	**LE 469**	**LE 466**	**LE 483**	**LE 489**	**LE 48B**
24.24	24.24	24.24	24.24	24.24	24.24
882 (1,200)	974 (1,325)	1,029 (1,400)	1,066 (1,450)	1,066 (1,450)	1,066 (1,450)
2,100	2,100	2,100	2,100	2,100	2,100
4,435	4,895	5,180	5,355	5,345	5,330
1,300–1,900	1,500–1,900	1,200–1,900	1,100–1,800	1,200–1,900	1,100–1,900
199	203	203	203	196	200
✓	✓	✓	✓	✓	✓
✓	✓	–	–	✓	✓
IMO Tier III, EU Stage V	IMO Tier III, EPA Tier 4	IMO Tier II, China 2, RCD 2013/53/EC	IMO Tier II	IMO Tier III, EPA Tier 4	IMO Tier III, EU Stage V

D2862

Technical features

		Heavy duty			
Type designation		**LE 437**	**LE 454**	**LE 424**	**LE 427**
Displacement	l	24.24	24.24	24.24	24.24
Nominal rating [1]	kW (hp)	551 (749)	588 (800)	662 (900)	662 (900)
Rated speed	rpm	1,800	1,800	1,800	1,800
Maximum torque	Nm	3,300	3,510	3,950	3,910
at speed	rpm	1,000–1,600	1,000–1,600	1,100–1,600	1,100–1,600
Lowest specific fuel consumption [1]	g/kWh	196	202	199	193
Classifiable		✓	✓	✓	✓
Exhaust gas aftertreatment		✓	–	–	✓
Exhaust gas status		IMO Tier III	IMO Tier II, EPA Tier 3, China 2, RCD 2013/53/EC	IMO Tier II, China 2, RCD 2013/53/EC	IMO Tier III, EPA Tier 4

1) Tolerance +5 % according to DIN ISO 3046-1

Heavy duty		
LE 444	**LE 447**	**LE 44A**
24.24	24.24	24.24
735 (1,000)	735 (1,000)	735 (1,000)
1,800	1,800	1,800
4,380	4,340	4,388
1,100–1,600	1,100–1,600	1,300–1,600
199	193	195
✓	✓	✓
–	✓	✓
IMO Tier II, China 2, RCD 2013/53/EC	IMO Tier III, EPA Tier 4	IMO Tier III, EU Stage V

MAN Truck & Bus SE
Vogelweiherstr. 33
90441 Nuremberg, Germany
man-engines@man.eu
www.man-engines.com

D114.642 · wd05223 · Printed in Germany
All data provided in this document is non-binding. This data serves informational purposes only and is especially not guaranteed in any way. Depending upon the subsequent specific individual projects, the relevant data may be subject to changes and will be assessed and determined individually for each project. This will depend on the particular characteristics of each individual project, especially specific site and operational conditions.

MAN Truck & Bus – A company of the TRATON Group